ergonomic products

Performance Without Compromise™

SPECIFICATIONS / SITE PREP MANUAL

Desergo™ Triple Compact Steri-Center



Manual Rev: C

Manual Part Number: 950-173

Thank you for purchasing the Ergonomic Products Desergo™ Triple Compact Steri-Center.

Years of research by dentists, engineers, and designers have made this a uniquely effective product in the industry. We stand behind our equipment, and genuinely believe it to be the best available on the market.

Should you have any questions regarding the product's installation or use, please don't hesitate to call our customer service specialists at **1-866-ERGO-4-US.** We may also be reached via email at **equip@ergonomic-products.com.**

We hope that you enjoy the benefits and quality of your new equipment and we look forward to assisting you with your future needs as your practice continues to grow!

—The Ergonomic Products Team

CONTENTS:

1. Dimension Specifications.....3
2. Basic Anatomy of the Desergo™ Compact Steri Center.....10
3. Required Tools / Unpacking and Inspecting.....11
4. Utility & Backing Locations.....12
5. Splash Guard Installation.....15
6. Install The Toe Kick.....16
7. Maintenance.....19



QUESTIONS?

Call our Customer Service Specialists at:

1-866-ERGO-4-US

1 – DIMENSION SPECIFICATIONS

Overall Dimensions of the Steri-Center

(MINIMUM CEILING HEIGHT 9')

CEILING BELOW 9', CALL ERGONOMIC PRODUCTS FOR OTHER OPTIONS

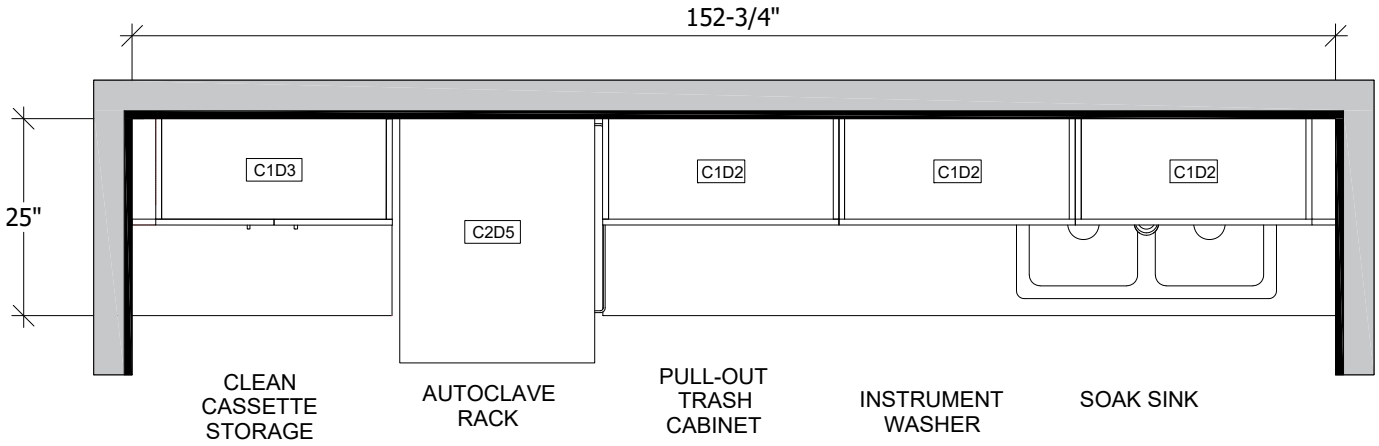

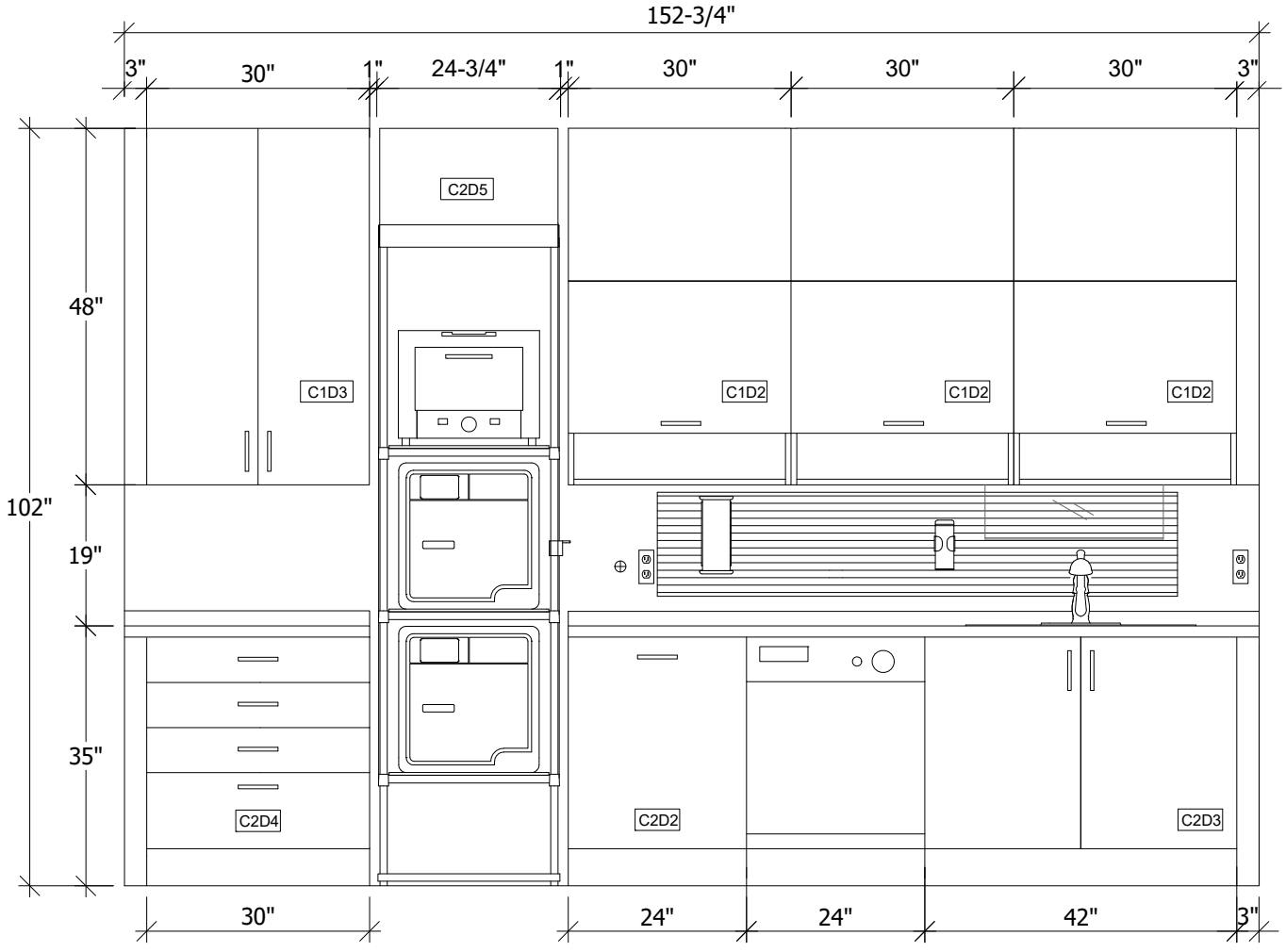

1 – DIMENSION SPECIFICATIONS CONT'D

Overall Dimensions of the Steri-Center

Mirrored

(MINIMUM CEILING HEIGHT 9')

CEILING BELOW 9', CALL ERGONOMIC PRODUCTS FOR OTHER OPTIONS

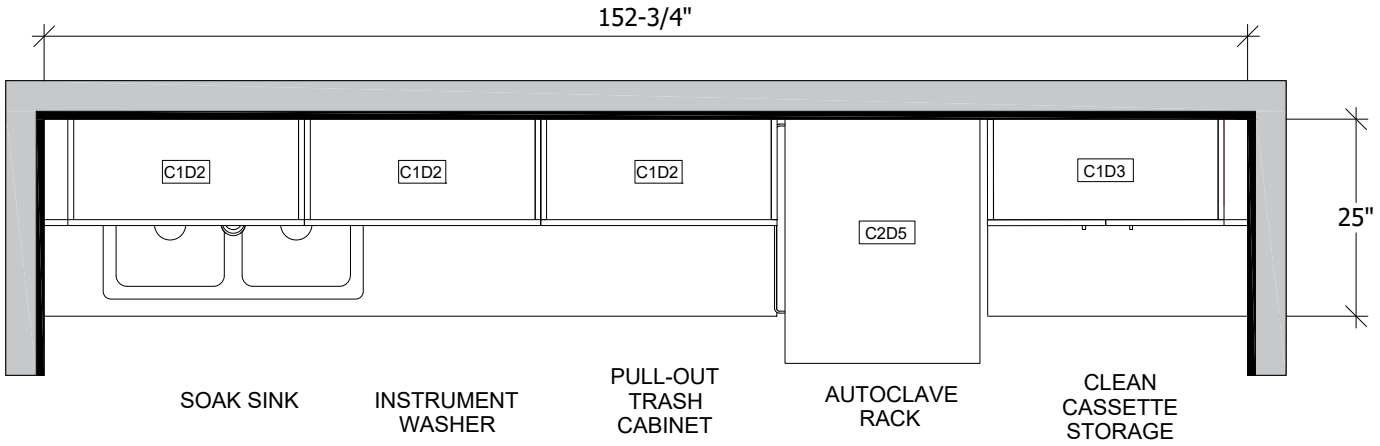

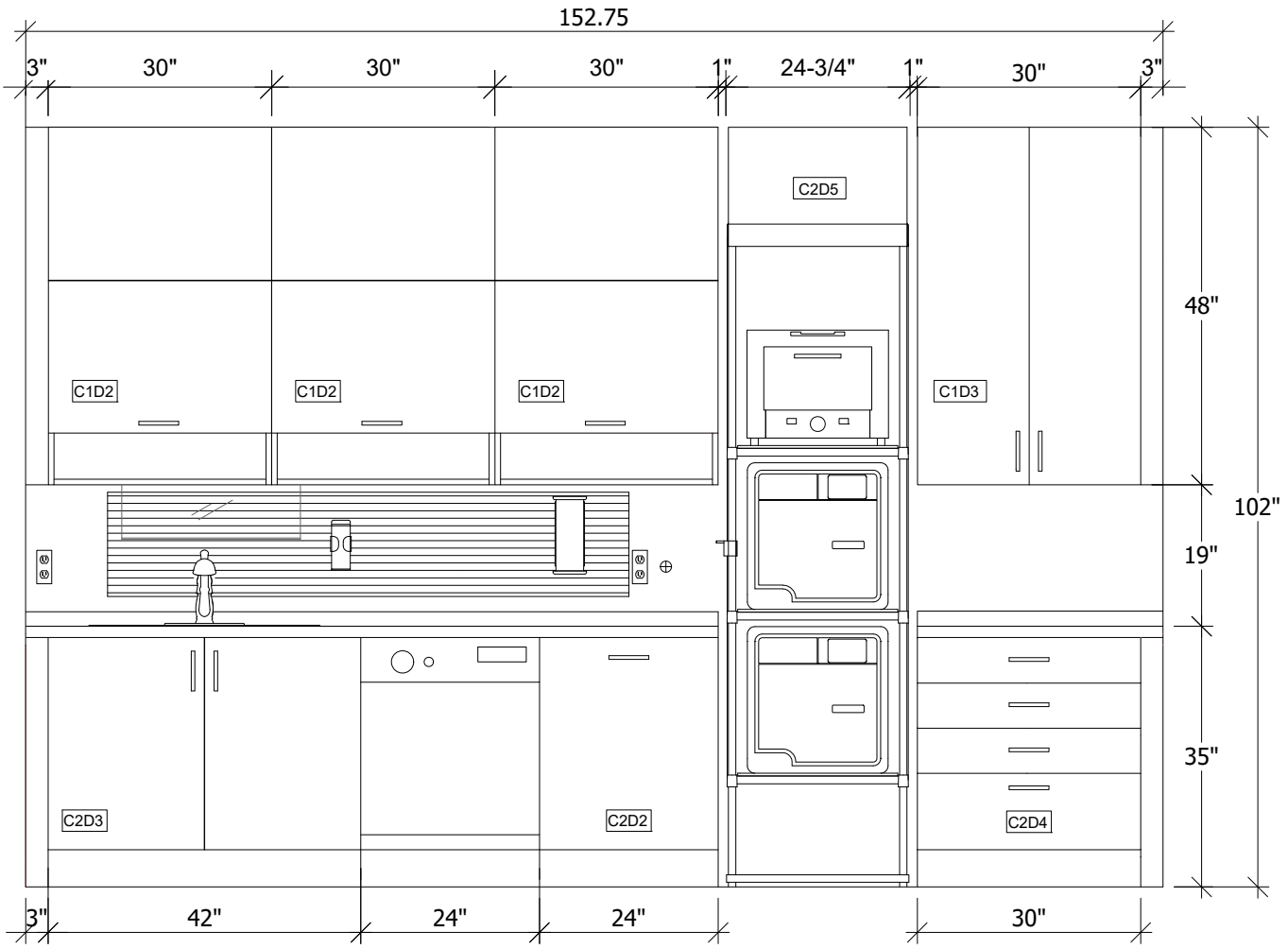

1 – DIMENSION SPECIFICATIONS CONT'D

Overall Dimensions of the Sterilization Pull Down C1D2

Top View

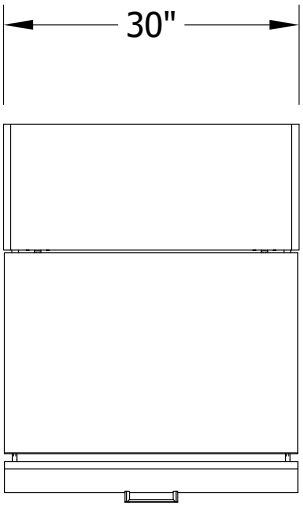

Front View

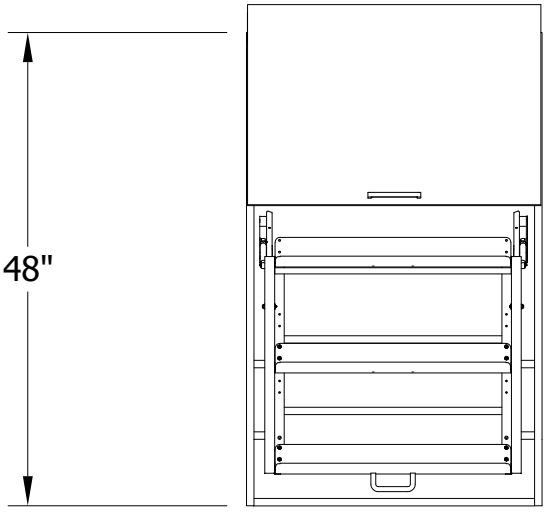

Side View

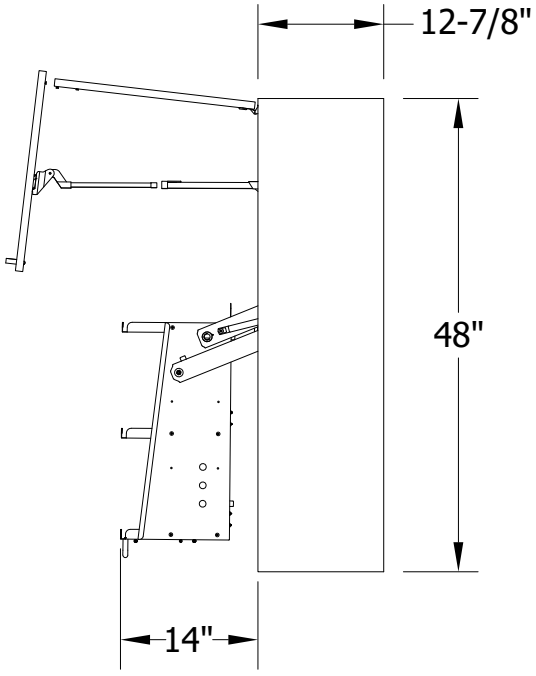

1 – DIMENSION SPECIFICATIONS CONT'D

Overall Dimensions of the Sterilization Pull Down C1D3

Top View

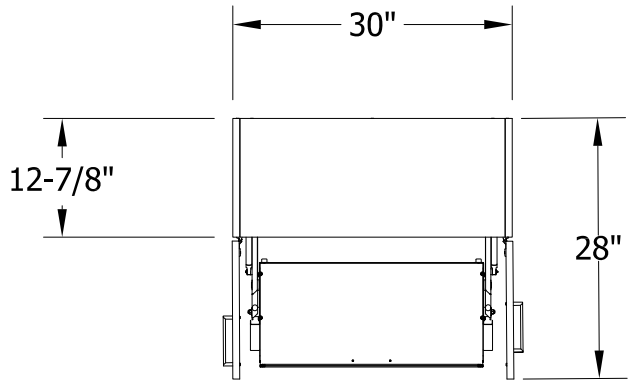

Side View

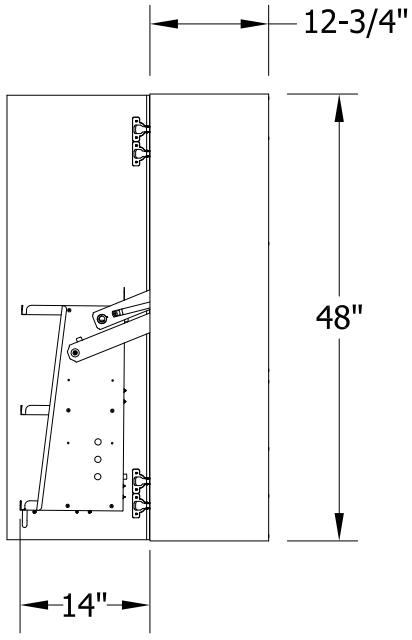

Front View

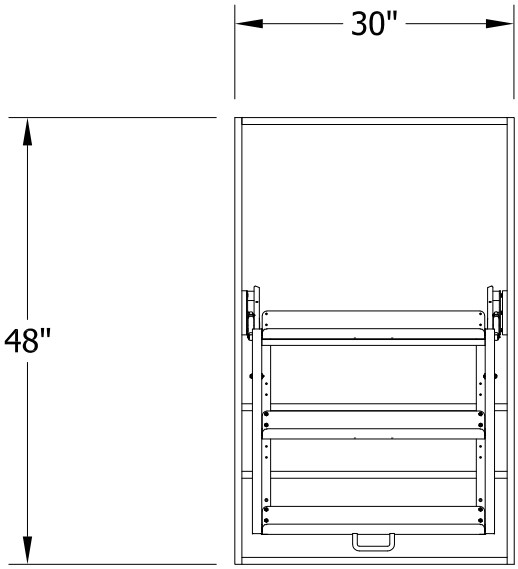

1 – DIMENSION SPECIFICATIONS CONT'D

Overall Dimensions of the Storage Drawers C2D4

Top View

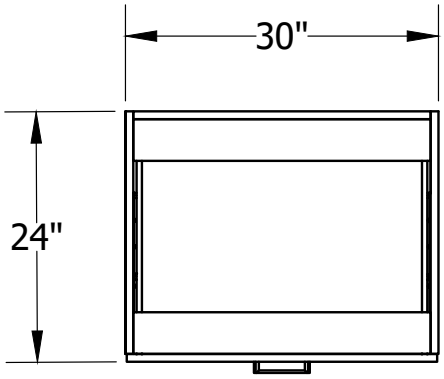

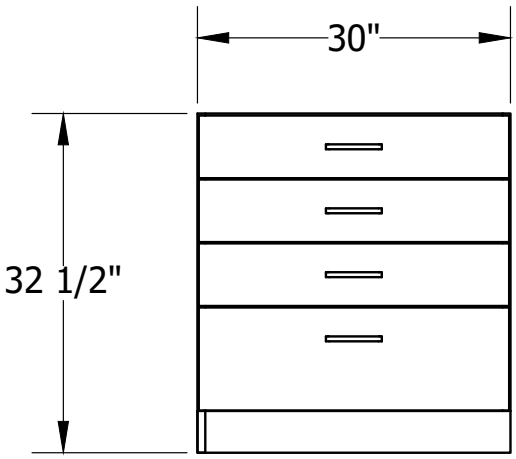

Front View

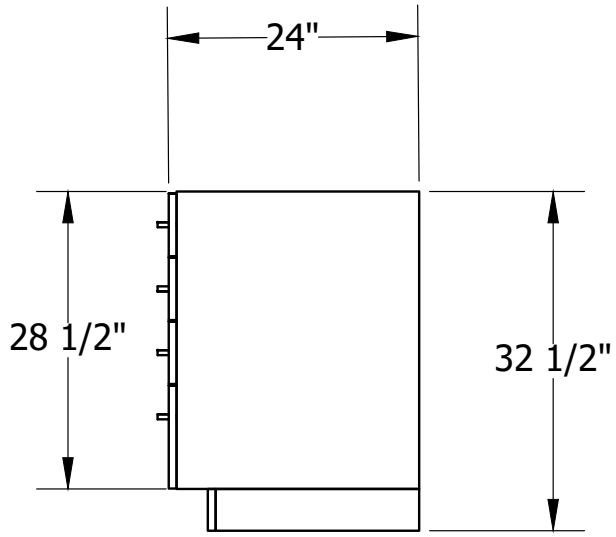

Side View

1 – DIMENSION SPECIFICATIONS CONT'D

Overall Dimensions of the Pull-Out Trash Cabinet C2D2

Top View

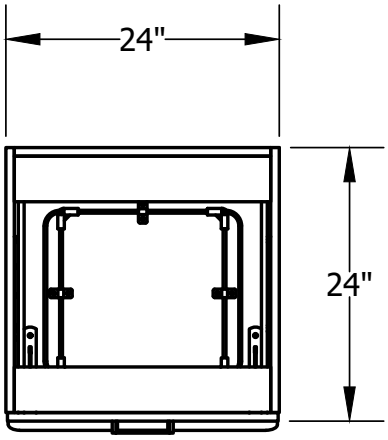

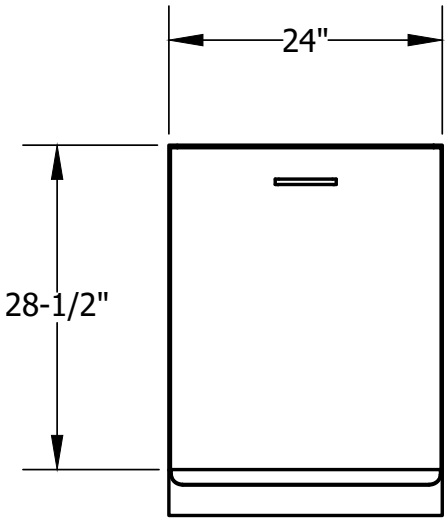

Front View

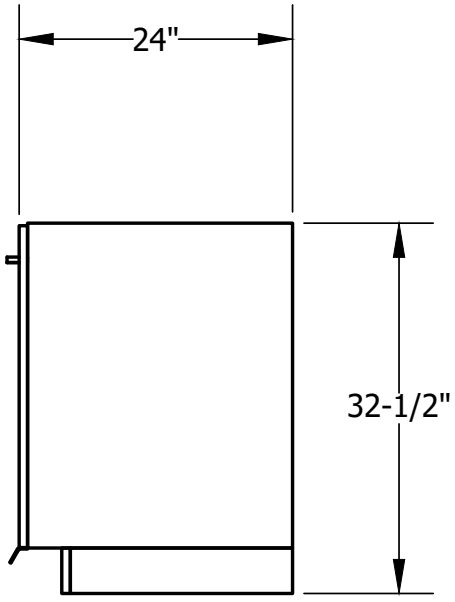

Side View

1 – DIMENSION SPECIFICATIONS CONT'D

Overall Dimensions of the Under-Sink Cabinet C2D3

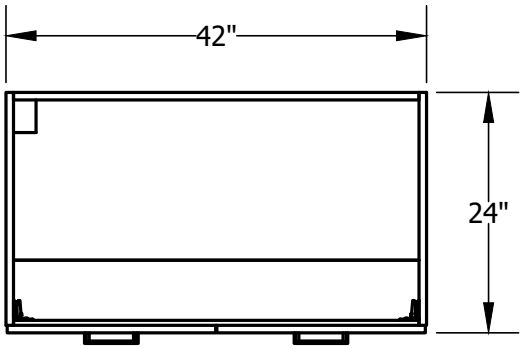

Top View

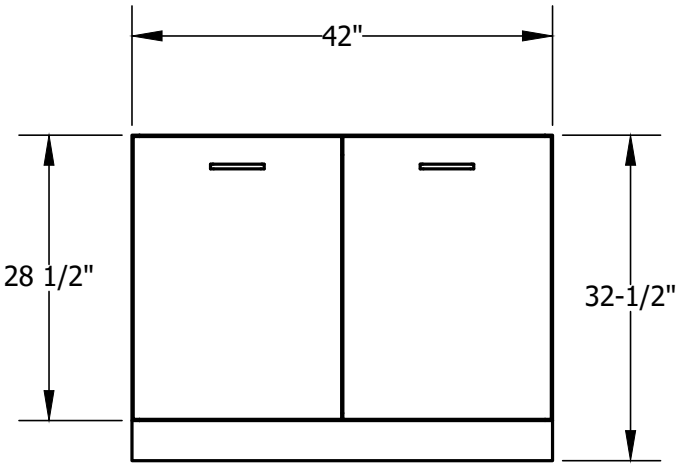

Front View

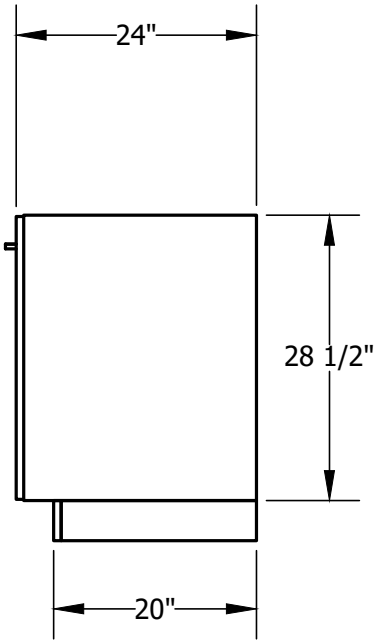

Side View

2 – BASIC ANATOMY OF YOUR COMPACT STERI CENTER

BASIC ANATOMY OF YOUR COMPACT STERI CENTER

Upper Cabinetry (left to right)
- 1 Clean Cassette Triple Pulldown (C1A4)
- 1 Autoclave Rack (C2D5). Instruments not included.
- 3 Sterilization Triple Pulldowns (C1A3)

Middle (left to right)
- Full-length, under-cabinet lighting
- 7-1/2' of Slat Wall
- Double Undermount Sink & Faucet
- Polycarbonate Splash-guard

Base Cabinetry (left to right)
- 4-drawer Cabinet (C2D4)
- 20 gal. Pull-out Trash (C2D2)
- Space for 24" Dishwasher (washer not included)
- Double Swing-door Under-sink Storage (C2D3)

Slat Wall Accessories - Recieve 8 FREE assessories from the 9 options below. Mix and match to suit your needs.
- Glove Box Holder (Single or Triple)
- Remote holder
- Pad & Pen holder
- Gift Bag bracket
- Printer shelf
- Monitor bracket
- Clear Tilt Bin - choice of (5, 6, or 9 slot)
- Sharps Holder
- Sanitation Wipes Holder



3 – REQUIRED TOOLS / UNPACKING AND INSPECTING

REQUIRED TOOLS:

Utility Knife
5/32” & 3/16” Allen Wrench
Adjustable Wrench

1. Inspect each shipping container (Fig 3.1) for visible damage upon arrival. If transit damage is found, contact Ergonomic Products immediately (this will expedite the corrective process).

2. Use safe lifting procedures to free the product from the container, and remove all packing material and accessory boxes from shipping container (Fig 3.1).

3. Lay individual components on clean surface to avoid scratching, and inspect contents. If damage is found, contact Ergonomic Products immediately.

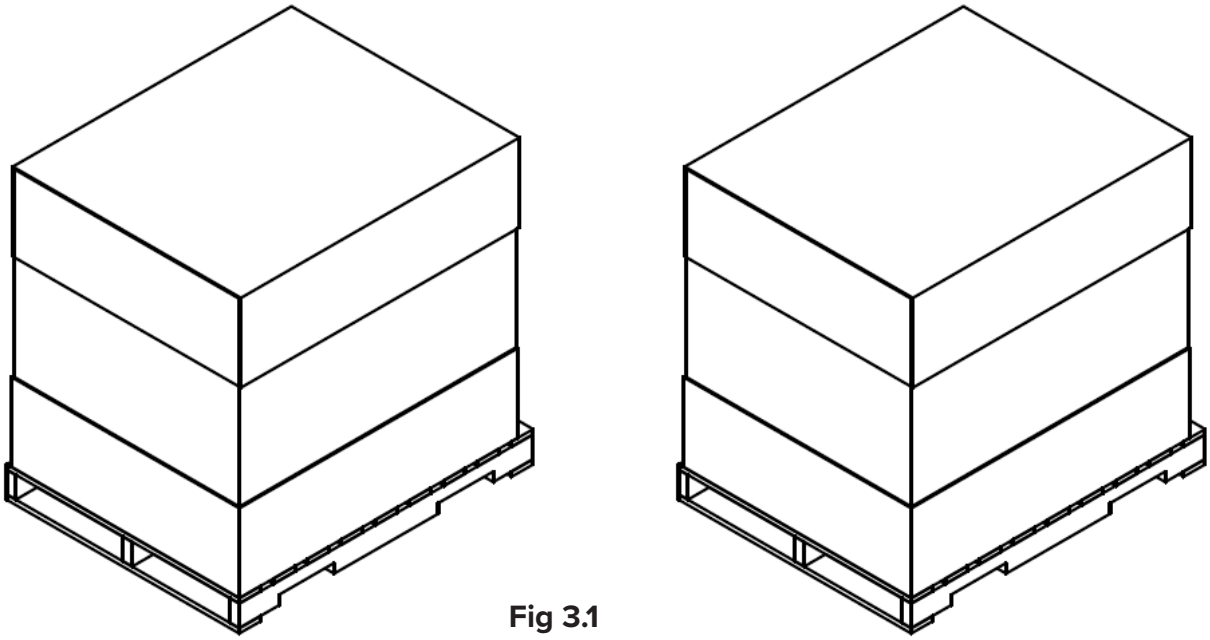

Fig 3.1

4 – UTILITY & BACKING LOCATIONS

ERGONOMIC PRODUCTS REQUIRES installation in an area equipped with a suitable floor drain or equivalent water management system.

The floor drain should be positioned to accommodate condensation, cleaning water, or incidental water accumulation that may occur during normal operation, such as directly beneath the dishwasher.

The installation area should be constructed of water-resistant materials and finished with vinyl sheet flooring with 4” high flash coving at all floor-to-wall transitions. Provide continuous, smooth transitions with no gaps or exposed edges. All sheet flooring seams shall be heat-welded to create a continuous, sealed surface in accordance with the flooring manufacturer’s recommendations.



4 – UTILITY & BACKING LOCATIONS

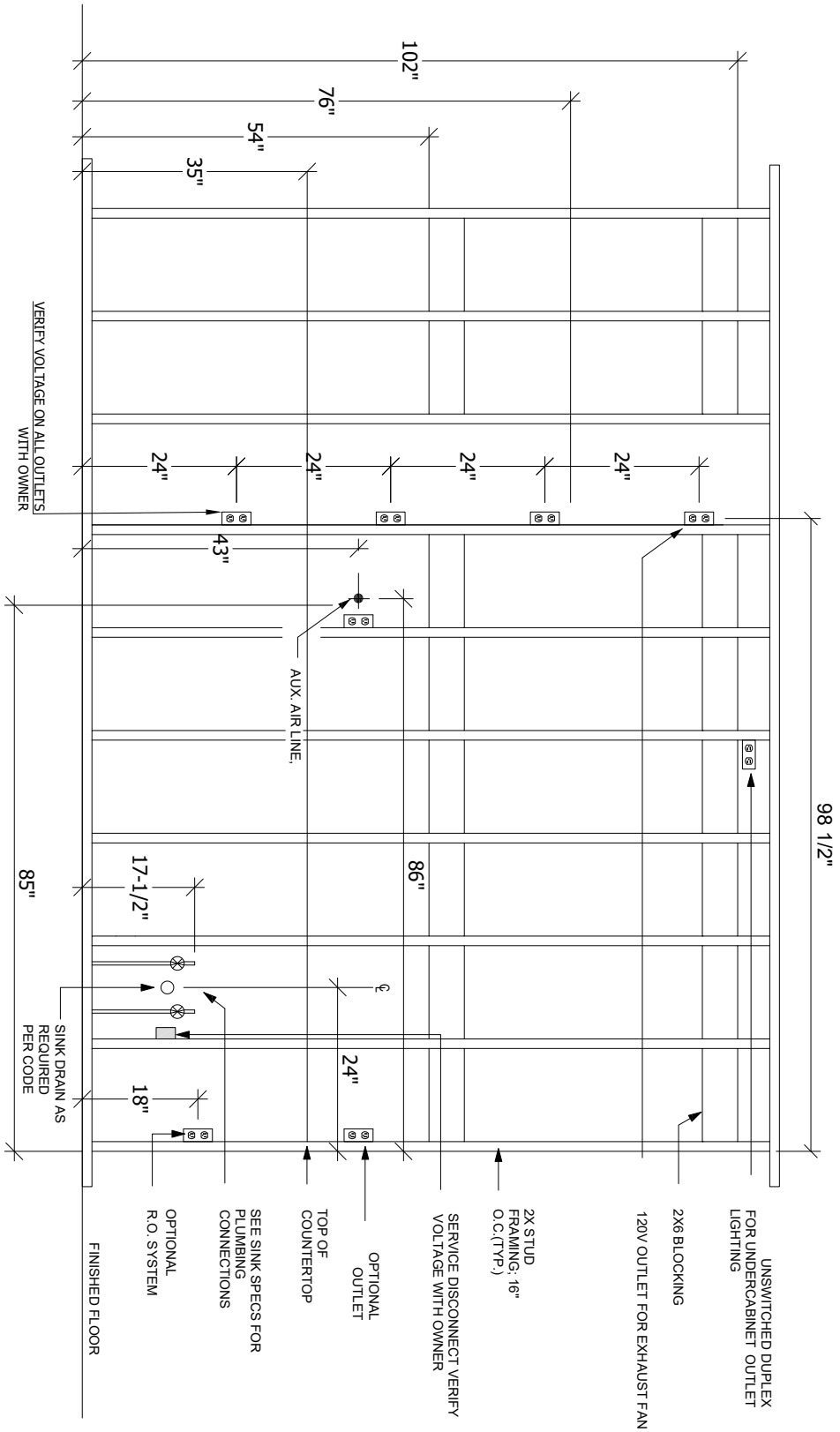

For HVAC requirements, see the manual of the Autoclave rack provided by Design Ergonomics

Final plumbing connections to be made by a licensed plumber.

4 – UTILITY & BACKING LOCATIONS CONT'D

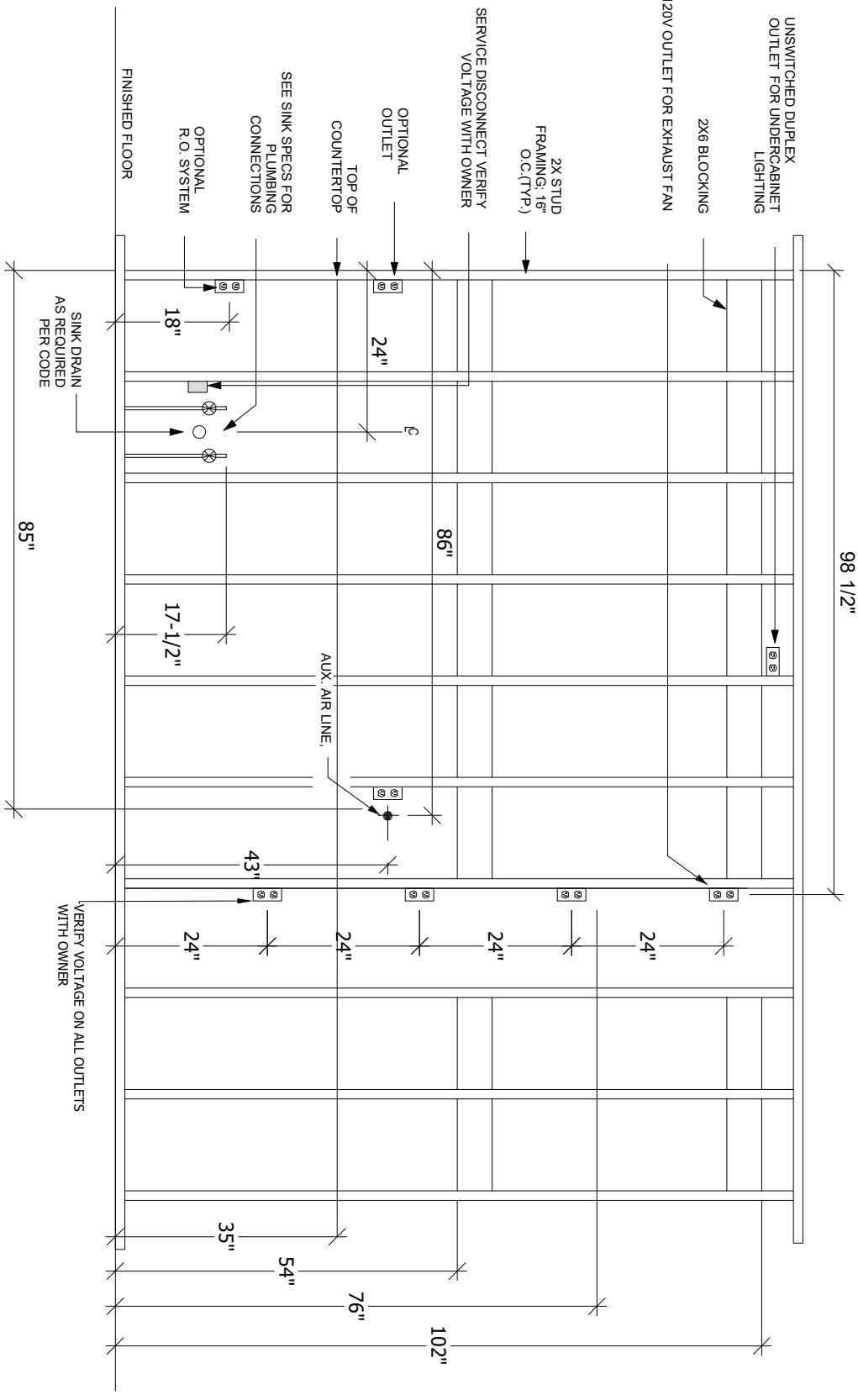

Mirrored

For HVAC requirements, see the manual of the Autoclave rack provided by Design Ergonomics

Final plumbing connections to be made by a licensed plumber.

5 - SPLASH GUARD INSTALLATION

Splash Guard Installation Instructions

Required
Tools: Power Driver w/Phillips bit - Level - Pencil - Tape Measure - (2) Clamps - Hardware Provided

1.The Splash Guard is to be installed over the Coenzyme sink. This is the 1st sink on the left, and it will cover the sink to its right.

2.We recommend using clamps to hold the Splash Guard brackets in place. Measurement between the 2 brackets will measure out to 22-7/16”

3.Brackets need to be mounted flush with the front of the upper cabinet.



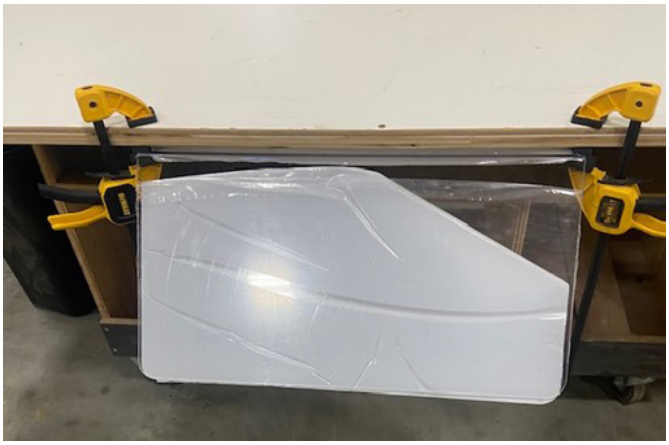



6 - INSTALLING THE TOE KICK

Toe Kick Installation Instructions:

The Toe Kick comes with the following parts that are precut to each cabinet size.
1. Toe Kick Panel (pre cut to size) | 2. End Caps (2) | 3. Anchor Clip (2)

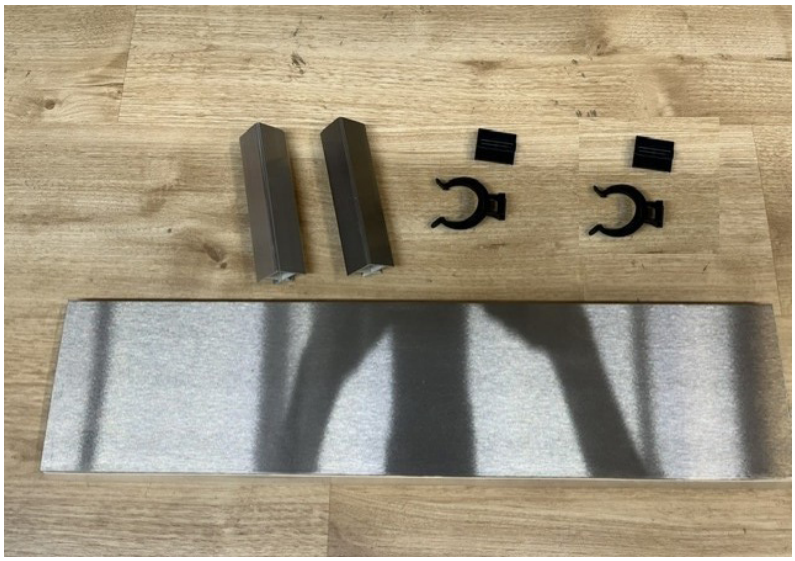

Flip the Toe Kick plate to reveal the track in the middle. This track is for the Anchor Clips to mount on to. Prepare the Anchor clip by sliding the clip opening on to the on to the track of the clip base. Repeat this for the second clip and base.







6 - INSTALLING THE TOE KICK cont'd

Take the assembeld clip and slide it down the middle of track slightly on the Toe Kick Panel. Flip the Panel around and repeat the step with the remaingin clip assembly.

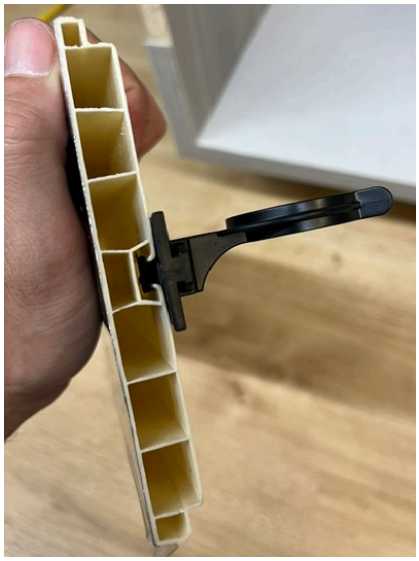

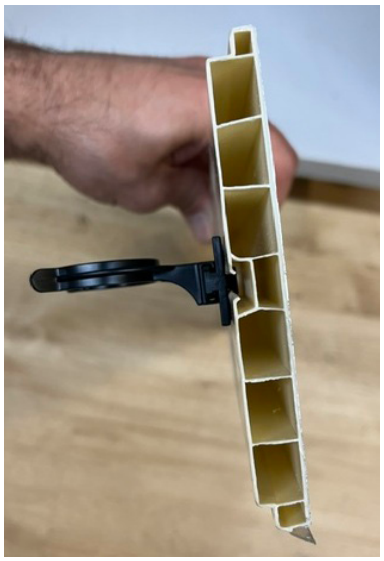

Take the mounted clip on the Toe Kick panel and slide it underneath cabinet. Snap in place the clip on the foot post. Repeat this step for the other end of the panel. If you need to adjust the Toe Kick Panel slide the Panel to reach desied placment.





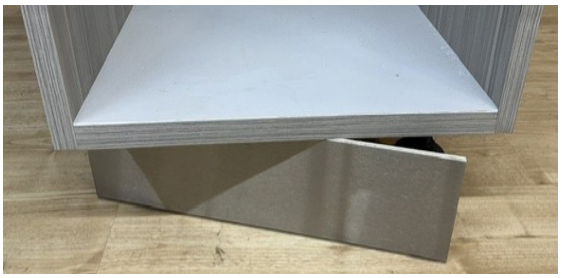

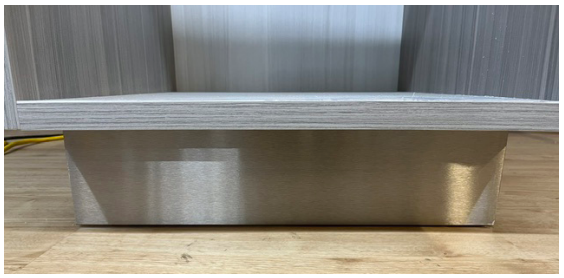

6 - INSTALLING THE TOE KICK cont'd

With the Toe Kick Panel secured to the legs, the end caps can be slid on. Line up the end cap opening with the Toe Kick Panel, and slid into place. repeat this for the other end of the panel.

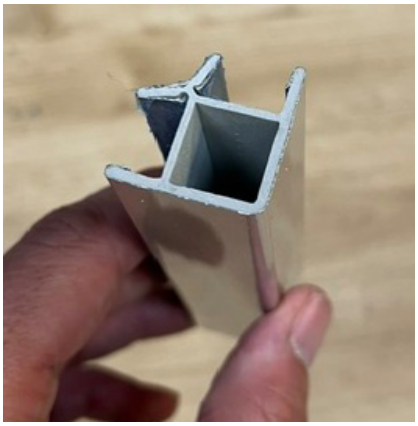

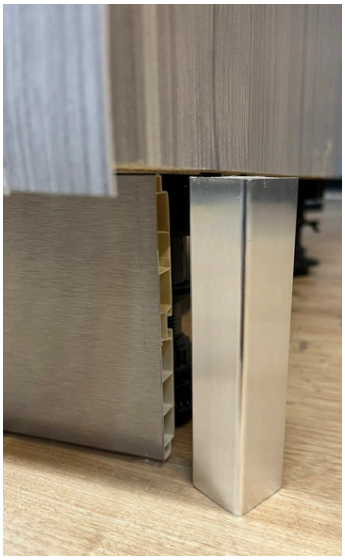

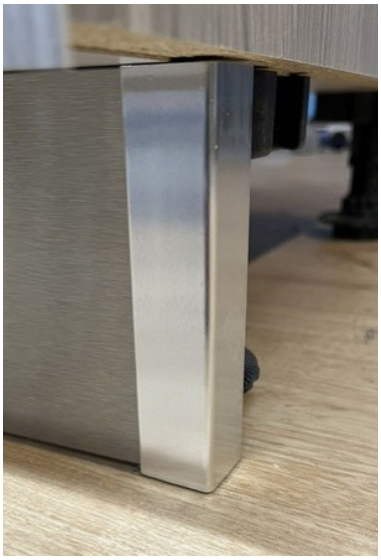

If there is an installation where the Toe Kick Panels are side by side the following joining cap is used. slide the cap on the end of the panel as shown. slide the other panel to hold in place.

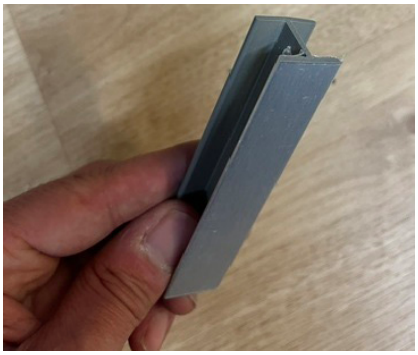

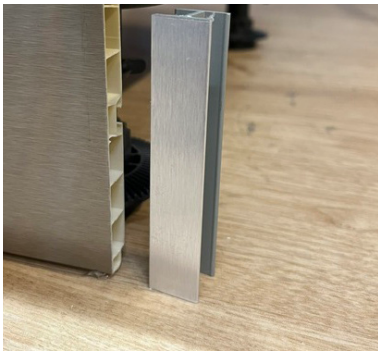



7 – MAINTENANCE

CLEANING AND DISINFECTING DENTAL UNITS AND ENVIRONMENTAL SURFACES:

GENERAL GUIDELINES:

After treatment of each patient and at the completion of daily work activities, countertops and dental unit surfaces that might have been contaminated with patient material or when the surface is contaminated with biological material must be cleaned with disposable toweling (for example PDI Super Sani Cloth) and water as necessary. Then disinfect surfaces with a suitable chemical germicide (for example DisCide Ultra Disinfectant Spray).

The CDC recommends using a chemical germicide registered with the EPA as a “hospital disinfectant” and labeled for “tuberculocidal” (i.e., mycobactericidal) activity to disinfect surfaces that have been soiled with patient material. These intermediate-level disinfectants include phenolics, iodophors, and chlorine-containing compounds. Because mycobacteria are among the most resistant groups of microorganisms, germicides effective against mycobacteria should be effective against many other bacterial and viral pathogens.

Low-level disinfectants—EPA-registered “hospital disinfectants” that are not labeled for “tuberculocidal” activity (e.g., quaternary ammonium compounds)—are appropriate for general housekeeping purposes such as cleaning floors, walls, and other housekeeping surfaces. The CDC does not recommend using intermediate- and low-level disinfectants to reprocess critical or semi critical dental instruments.

7 – MAINTENANCE cont'd

CLEANING:

METAL COMPONENTS:

Use mild detergent and water or any of the commercially available sprays, such as 409, Fantastic, or others, with a soft cloth or sponge. DO NOT USE ABRASIVES as these will permanently scratch the finish.

PLASTIC, RUBBER, AND PAINTED SURFACES:

Use mild detergent and water or any of the commercially available sprays, such as 409, Fantastic, or others, with a soft cloth or sponge. DO NOT USE ABRASIVES as these will permanently scratch the finish.

CORIAN® SURFACES:

Your Corian surfaces are delivered with a matte/satin finish and any of the above cleaners are acceptable. Minor surface blemishes can be brought back to a like-new finish with the use of a mild abrasive cleaner such as Comet on their own or in conjunction with a green or white Scotch-Brite Pad.

Clean with warm, soapy water or any non-abrasive ammonia-based cleaner or disinfectant. Dry thoroughly after cleaning. For tougher stains, use Clean EnCounters® from DuPont.
Do NOT use window-cleaning solutions (they will leave a waxy build-up), ScotchBrite or other abrasive pads.
Do NOT use a any cleaning products that contain HYDROGEN PEROXIDE.

For more information on cleaning CORIAN surfaces, go to:
http://www.dupont.com/products-and-services/construction-materials/surface-design-materials/brands/corian solid-surfaces/articles/how-to-clean-corian.html

Dried composites can be scraped off using a single-edged razor blade or equivalent, being cautious not to dig into the surface.

If the surface becomes too scarred to be renewed with the above procedures, a resurfacing can be done. Please contact us or any Corian-certified installer for the correct procedure.

*The FDA recommends that items contaminated with blood or body fluids, which might contain blood-borne pathogens, must receive intermediate level disinfection with a product having an EPA-registered claim for activity against hepatitis B after cleaning.