ergonomic products

Performance Without Compromise™

Assembly Manual

Autoclave Mobile Rack



Product ID: C2D5

Manual version: C

Thank you for purchasing the Ergonomic Products Autoclave Mobile Rack.

Years of research by dentists, engineers and designers have made this a uniquely effective product in the industry. We stand behind our equipment, and genuinely believe it to be the best available on the market.

Should you have any questions regarding the product's installation or use, please don't hesitate to call our customer service specialists at **1-866-ERGO-4-US.** We may also be reached via email at **equip@ergonomic-products.com.**

We hope you enjoy the benefits and quality of your new equipment and we look forward to handling your future needs as your practice continues to grow!

- The Ergonomic Products Team

CONTENTS:

1. Specifications....3
2. Anatomy of the Autoclave Rack....4
3. Rack Assembly....5
4. Fume Hood Assembly....12
5. Side Panel Assembly....14
6. Wrap Rod Installation....17
7. Vent Connection....19
8. Postioning the Autoclave / Pairing the Remote....21
9. Maintenance....22
10. Parts List....24



QUESTIONS?

Call our Customer Service Specialists at:

1-866-ERGO-4-US.

1 - SPECIFICATIONS

Blower Fan Specifications							
Rated Voltage	Max. Power Consumption	Current	Frequency	Max. Speed	Max. Airflow	Max. Static Preassure	Max. Noise Level
110 VAC	74W	1.14A	50/60Hz	3800 RPM	569 CFM	412Pa	60dBA

Fan Speed vs CFM Chart	
Setting 6 (max. RPM)	569
Setting 5	474
Setting 4	379
Setting 3	284
Setting 2	189
Setting 1 (min. RPM)	94

General Specifications

- **Maximum weight limit per shelf:**
  180 lbs. (three shelves maximum per rack)
- **Power Cord:**
  SJT, 18-3 AWG, 300V, 7 ft long. NEMA 5-15 Type A plug
- **Wireless Remote Control:**
  On/Off Switch, Six Speed Levels, Range of 50 ft.
- **Minimum ceiling height 90”**

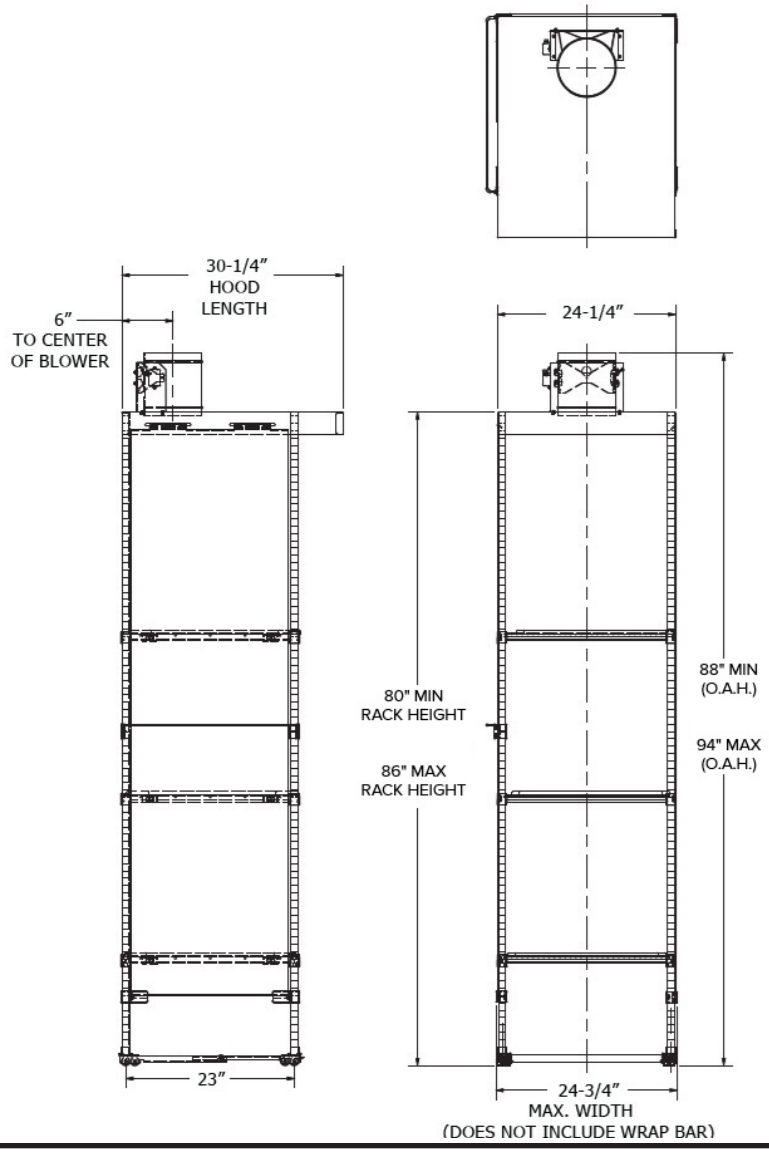

2 - ANATOMY OF AUTOCLAVE RACK

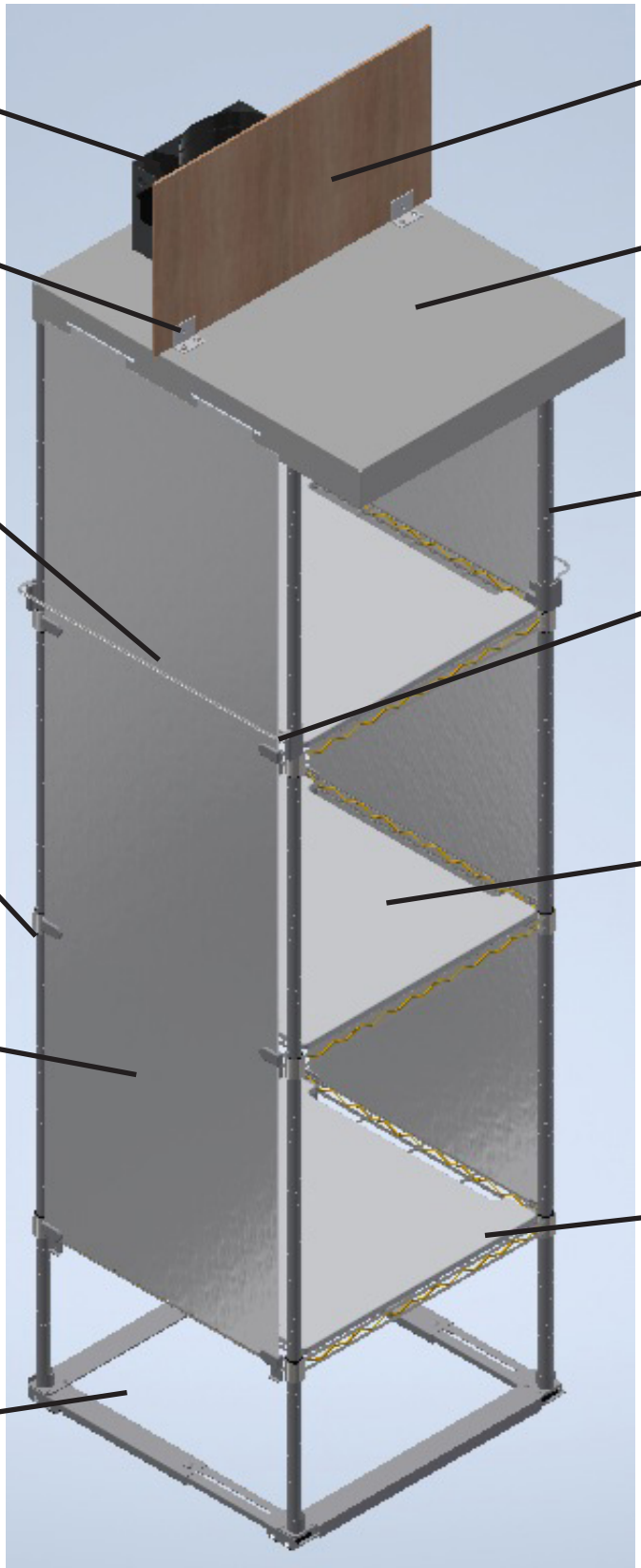

3 - RACK ASSEMBLY

There are four poles that come with the Autoclave Rack (Fig 1.0). Each pole will need to have a Shelf Support Clip assembled on to the poles (Fig 1.1). These clips help to hold each Wire Shelf (Fig 1.2) in place.

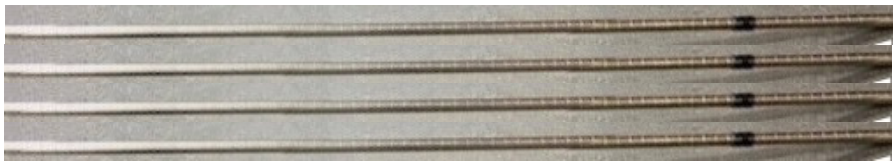

Fig 1.0



Fig 1.1



Fig 1.2 (Front View)

To prepare for the first Wire Shelf (Lower), each pole will need a support clip attached. The bottom of the clip aligns with the groove that is 1 foot from the bottom of the pole (Fig 1.3).

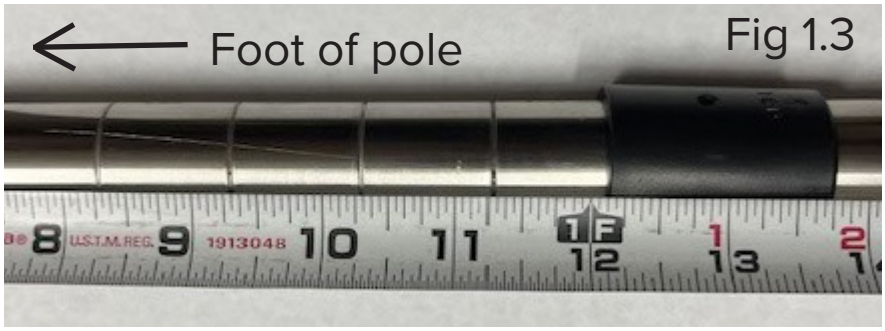

Fig 1.3

3 - RACK ASSEMBLY CONT'D

To attach the Support Clip gently slide the clip up or down until the rib on the inside of the clip engages with the groove on the support rod. See (Fig 1.4) for proper orientation of clips.



Fig 1.4



Fig 1.5

Arrows on each clip **must be pointing upward.** Make sure that the ribs on inside of clips are engaged with the groove in the support rod (Fig. 1.5).

3 - RACK ASSEMBLY CONT'D

To assemble the Wire Shelf and the Poles, insert the Pole into the Hole of the Wire Shelf as shown in Fig 1.6. Slide the Pole through the hole but do not go completely through as shown in Fig 1.7.

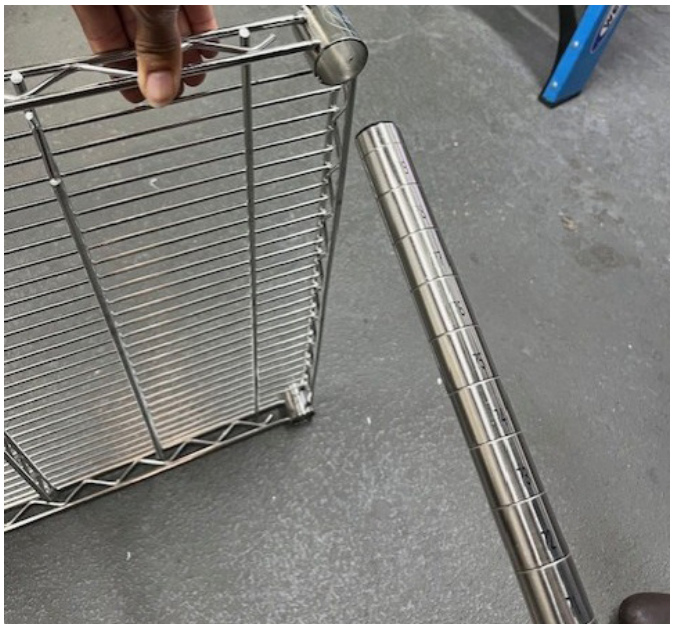

Fig 1.6



Fig 1.7

Once the first Pole is in position as shown in Fig 1.8. slide the second Pole though the next hole as shown in Fig 1.9.



Fig 1.8



Fig 1.9

3 - RACK ASSEMBLY CONT'D

With the first two Poles assembled to the Wire Shelf, flip the shelf onto its side as shown in Fig 2.0. Continue installing the next pole by repeating the steps and flipping the shelf on its side to install the last pole as shown in Fig 2.1.



Fig 2.0



Fig 2.1

With the four Poles in the Wire Shelf (Fig 2.2), slide the Poles until they engage with the Shelf Support Clips but do not secure them in place yet (Fig 2.3).



Fig 2.2



Fig 2.3

3 - RACK ASSEMBLY CONT'D

While grasping two of the four support posts (Fig 2.4), carefully lift assembly upright and allow assembly to sit on the four feet on floor surface (Fig 2.5). Secure the Wire Shelf in place by pushing down on the shelf, making sure that the Support Clips are **level** with one another.



Fig 2.4



Fig 2.5

Position roller assembly next to rack assembly (Fig 2.6). **Note: the front of the roller assembly has the black foot brake pads as shown in (Fig. 2.7).** While grasping two of the four posts **(Note: Do not lift by grasping wire shelf)** carefully position rack assembly aligning each support post with the cylindrical openings in the four corners of the roller assembly.



Fig 2.6

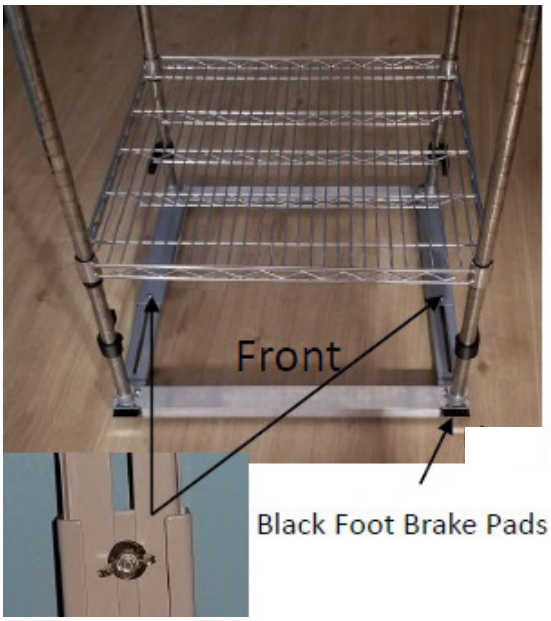

Fig 2.7

3 - RACK ASSEMBLY CONT'D



Fig 2.8

Depending on the height of your equipment, and the clearance needed for maintenance, the height for the second shelf should be measured from the top of the first shelf to the bottom of the Support Clip as shown in Fig 2.8

NOTE: Add 1/2" to your measurement to compensate for the ventilation shelf that will be added during installation.

Install the remaining Support Clips (Fig 2.9) as with the first shelf. Position the middle shelf over the top of each Support Rod (Fig 3.0) and gently slide down to engage the installed Support Clips (Fig 3.1).

NOTE: It is recommended to have two people to install the middle and upper shelves. Make sure shelves are **LEVEL**.

*All shelves must have the same orientation. See Fig 3.1

Repeat this for the 3rd shelf.

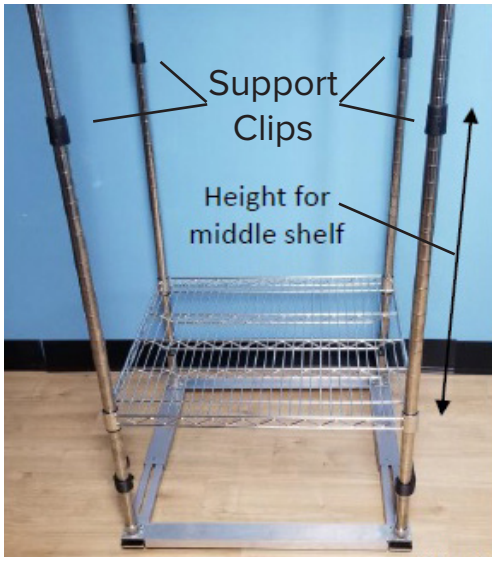

Fig 2.9



Fig 3.0



Fig 3.1

3 - RACK ASSEMBLY CONT'D

Once the Wire Shelves have been assembled (Fig 3.2) place the provided Ventilation Shelf (3) on each shelf as shown in Fig 3.3 & Fig 3.4.



Fig 3.2



Fig 3.3



Fig 3.4

4 - FUME HOOD ASSEMBLY

The Fume Hood (Fig 3.5, Fig 3.5a) comes installed with two brackets for the Cover Panel.

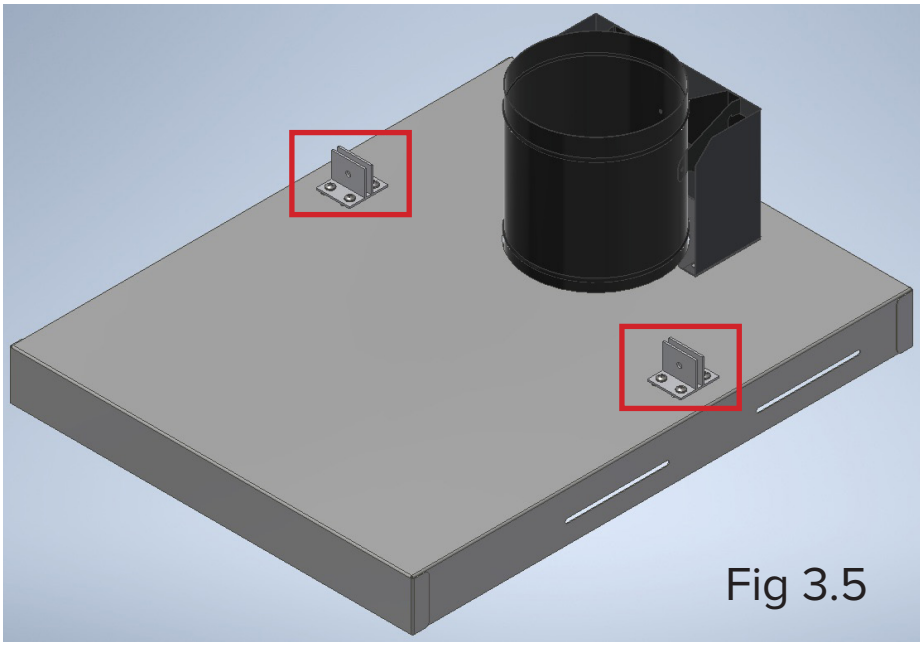

Fig 3.5

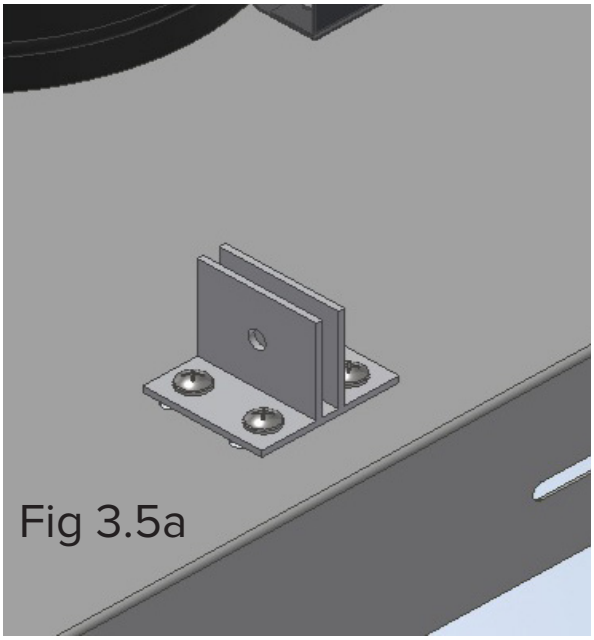

Fig 3.5a

With the provided Cover Panel (Fig 3.6) and hardware (two 1/4-20 phillips screws, and two 1/4-20 nuts) see Fig 3.6a, secure the panel by placing it in between the brackets and lining up the screw holes as shown in Fig 3.7 and Fig 3.7a. Use the provided hardware to secure in place (Fig 3.8).



Fig 3.6

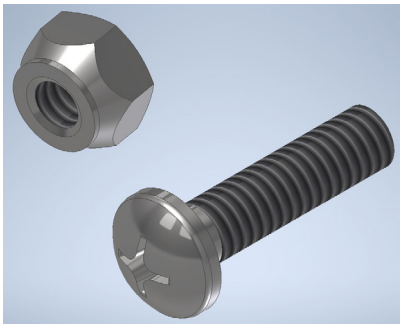

Fig 3.6a



Fig 3.7



Fig 3.7a

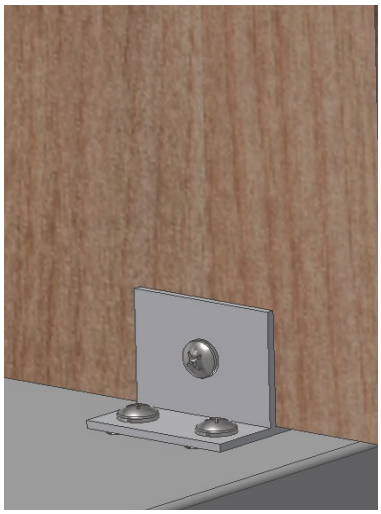

Fig 3.8

4 - FUME HOOD ASSEMBLY CONT'D

Using a sturdy platform (Fig 3.9) lift the Fume Hood Assembly and position it on top of the four support posts (Fig 4.0). **Note: Again, it is recommended to have two people lift and position the fume hood assembly.** Push fume hood all the way forward so the two back support posts are up against back wall of fume hood. (Fig. 4.1).


Fig 3.9


Fig 4.0


Fig 4.1

5 - SIDE PANEL ASSEMBLY

Each Side Panel has two hooks (Fig. 4.2) at the top of the panel which fit into two slots on each side of the Fume Hood (Fig 4.3). Lift Side Panel and align hooks with the slots in the Fume Hood (Fig 4.4). Allow hooks to drop down into slots (Fig 4.5) and secure panel in position.

Repeat this procedure for opposite side.

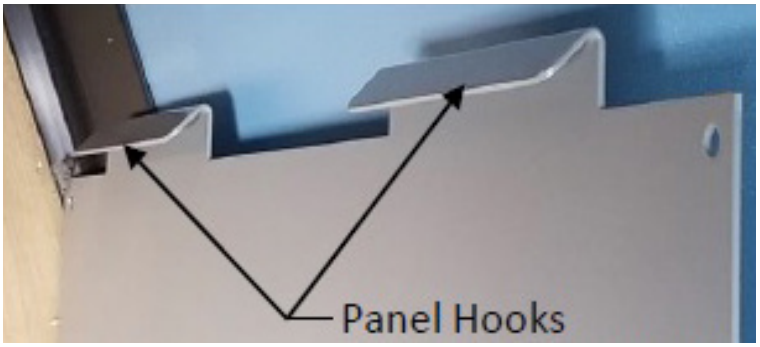

Fig 4.2



Fig 4.3



Fig 4.4



Fig 4.5

5 - SIDE PANEL ASSEMBLY CONT'D

Remove the protective film on the Side Panel as shown in Fig 4.6 and Fig 4.7. Discard the film after removal.



Fig 4.6



Fig 4.7

5 - SIDE PANEL ASSEMBLY CONT'D

Parts Bag
Open the parts bag with the remote and assorted clips, place the remote aside. Twelve clips are provided. Four will be used on the lower shelf, four on the middle shelf, and four on the top shelf. See Fig 4.8.



Fig 4.8

Panel Clips
Position the Panel Clip just above the shelf as shown in Fig 4.9. Insert the Panel Clip onto the Side Panel and slide down to secure in place as shown in Fig 5.0 and 5.1.
Fig 5.2 shows the inside view of the clip secured in place.

NOTE: You will repeat this procedure to the opposite side and rear side of the shelf. All panel clips have arrows on them, and they all slide down.



Fig 4.9



Fig 5.0



Fig 5.1



Fig 5.2

6 - WRAP ROD INSTALLATION

Position Wrap Rod Clip on the Pole and be sure its located on the DIRTY SIDE of the sterilization as shown in Fig 5.3. Push opening in clip firmly around the Pole until it snaps in place (Fig 5.4). Repeat for the opposite side of Wrap Rod (Fig 5.5 and 5.6).



Fig 5.3



Fig 5.4



Fig 5.5

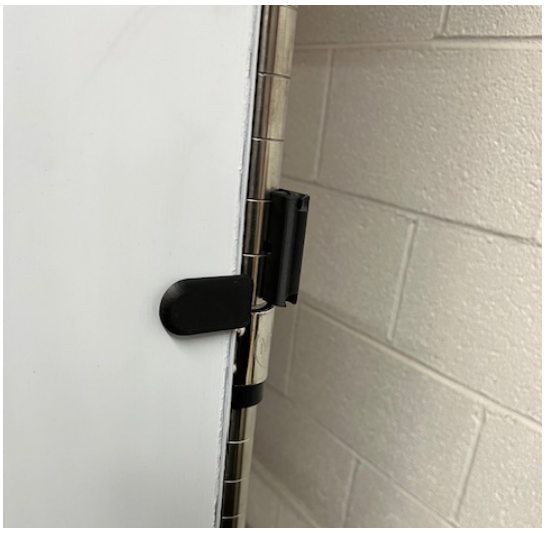

Fig 5.6

6 - WRAP ROD INSTALLATION CONT'D

Take the Wrap Rod (Fig 5.7) and insert one end of the rod into the Wrap Rod Clip as shown in Fig 5.8. Insert the other end of the rod into the Wrap Rod Clip (Fig 5.9) and make sure that the rod is level from side to side, see Fig 6.0.



Fig 5.7



Fig 5.8

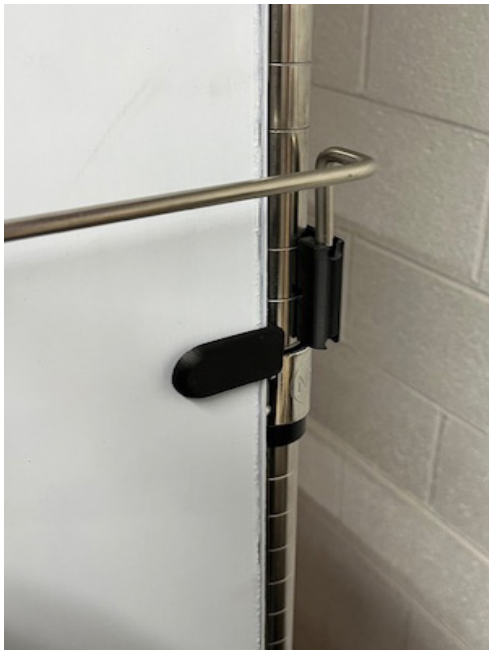

Fig 5.9



Fig 6.0

7 - VENT CONNECTION

Have a qualified HVAC technician install an 8” vent connection (Fig 6.1) from the top of blower fan (Fig 6.2) to the building ventilation system.

Note: Due to excessive moisture, this ventilation should vent to the outside of building and not directly into the ceiling plenum.

Plug fume hood blower fan into a 120V, 60Hz electrical receptacle see (fig 6.3). It is recommended to use an unswitched receptacle since the blower fan is provided with a remote control to power the unit on and off.

Note: Blower Fan is provided with a 7 foot power cord (see Fig 6.2) so ideally the receptacle should ideally be within that distance to plug unit in.

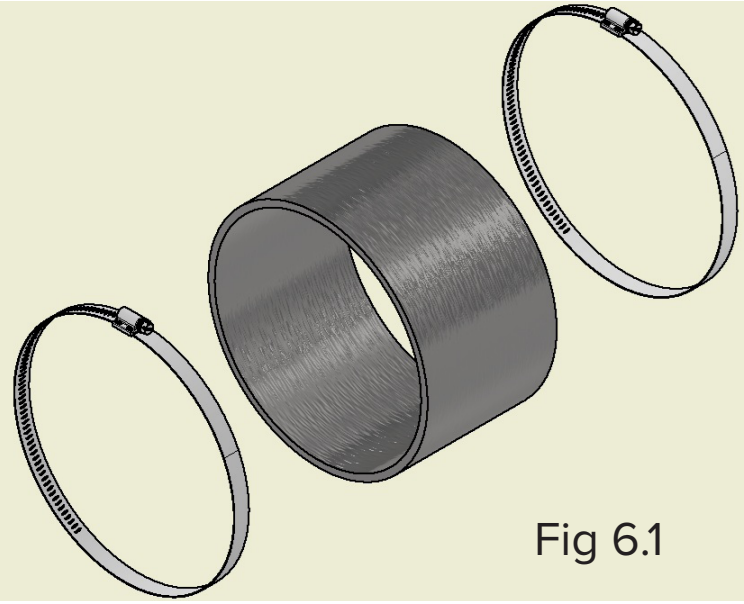

Fig 6.1



Fig 6.2

7 foot power cord

7 - VENT CONNECTION CONT'D

It is recommended to have electrical receptacles available near the final location of the rack for any others items/equipment that will be mounted in the rack.

Note: The number of receptacles will depend on the quantity of electrical devices/ equipment being used on the rack (3 receptacles are recommended).

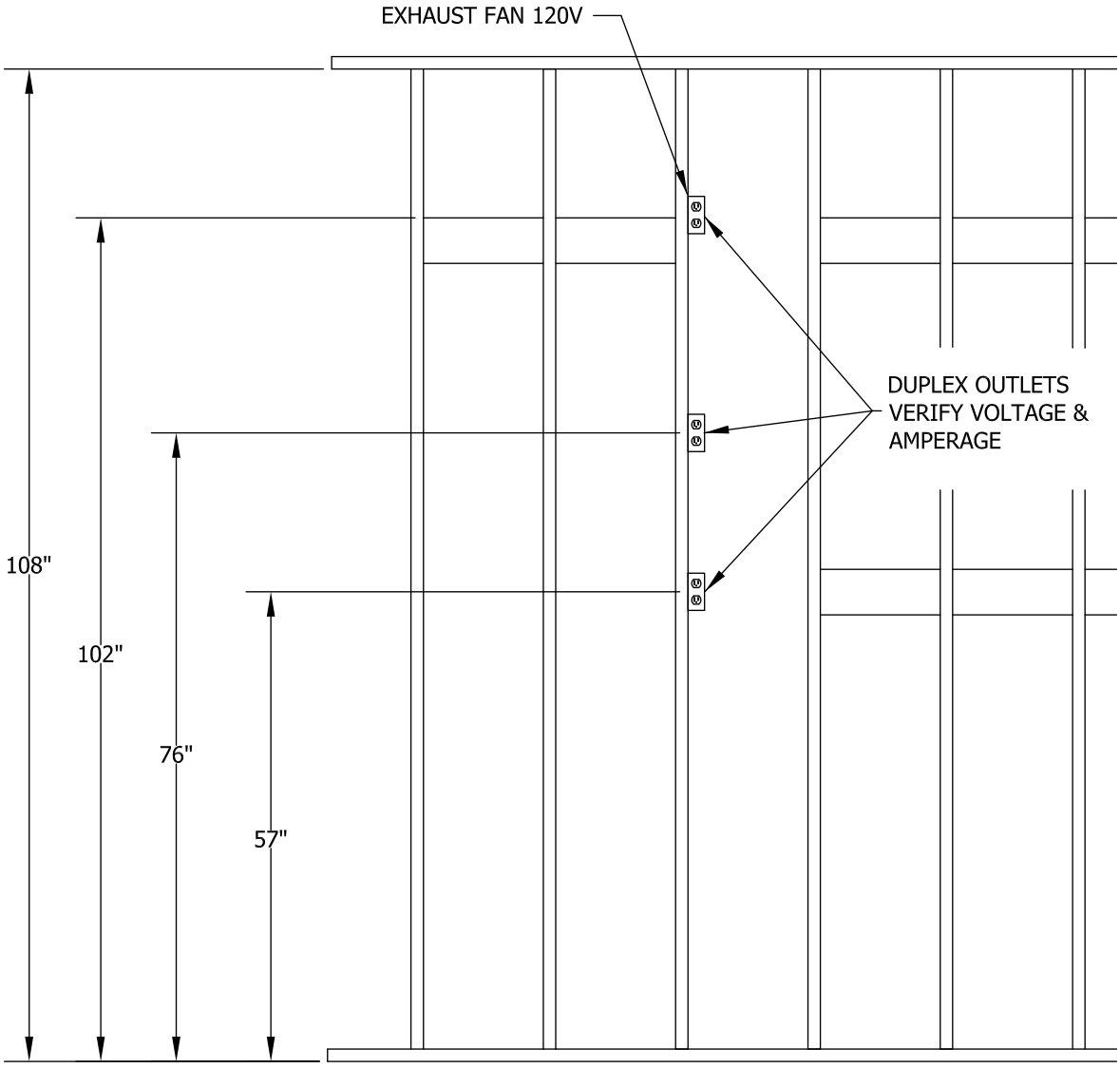

8 - POSITIONING THE AUTOCLAVE / PAIRING THE REMOTE

Position Autoclave Rack in its final location and push down on the black brake lever on the front of each roller assembly (Fig 6.6) to lock the wheels on the rollers.

The Autoclave Rack has been factory-wired to utilize a wireless remote control. The remote has been commissioned ("Paired") in the factory to the blower fan installed in the fume hood. Therefore the remote should operate the blower fan once the fan has been plugged into the 120V outlet. Should the fan not respond to the remote commands, follow the directions "Pairing the Remote" that comes with the wireless remote (Fig 6.7).

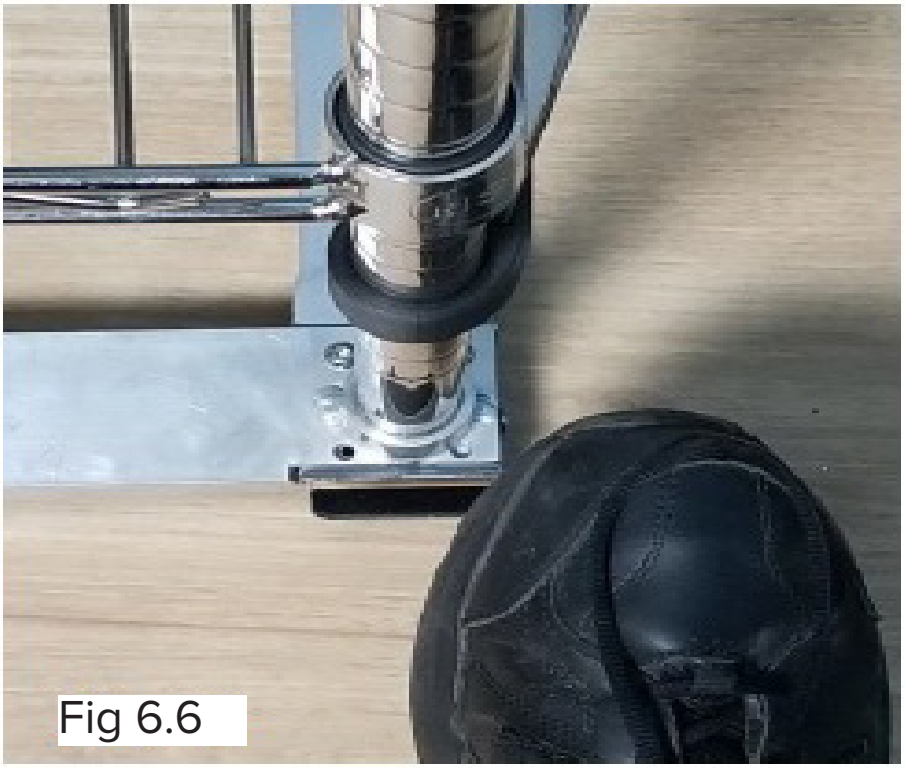

Fig 6.6



Fig 6.7

9 - MAINTENANCE

To facilitate maintenance and service, this rack is designed to be mobile (see page 20, fig 6.6). You can pull the rack foward see (Fig 6.8), and once its moved, you can remove one of the side panels (Fig 6.8a) to access any of the dental equpiment on the rack. To move the rack foward, release the brake lever on each roller and use both hands to grip under the lowest rack and slowly roll rack towards you.

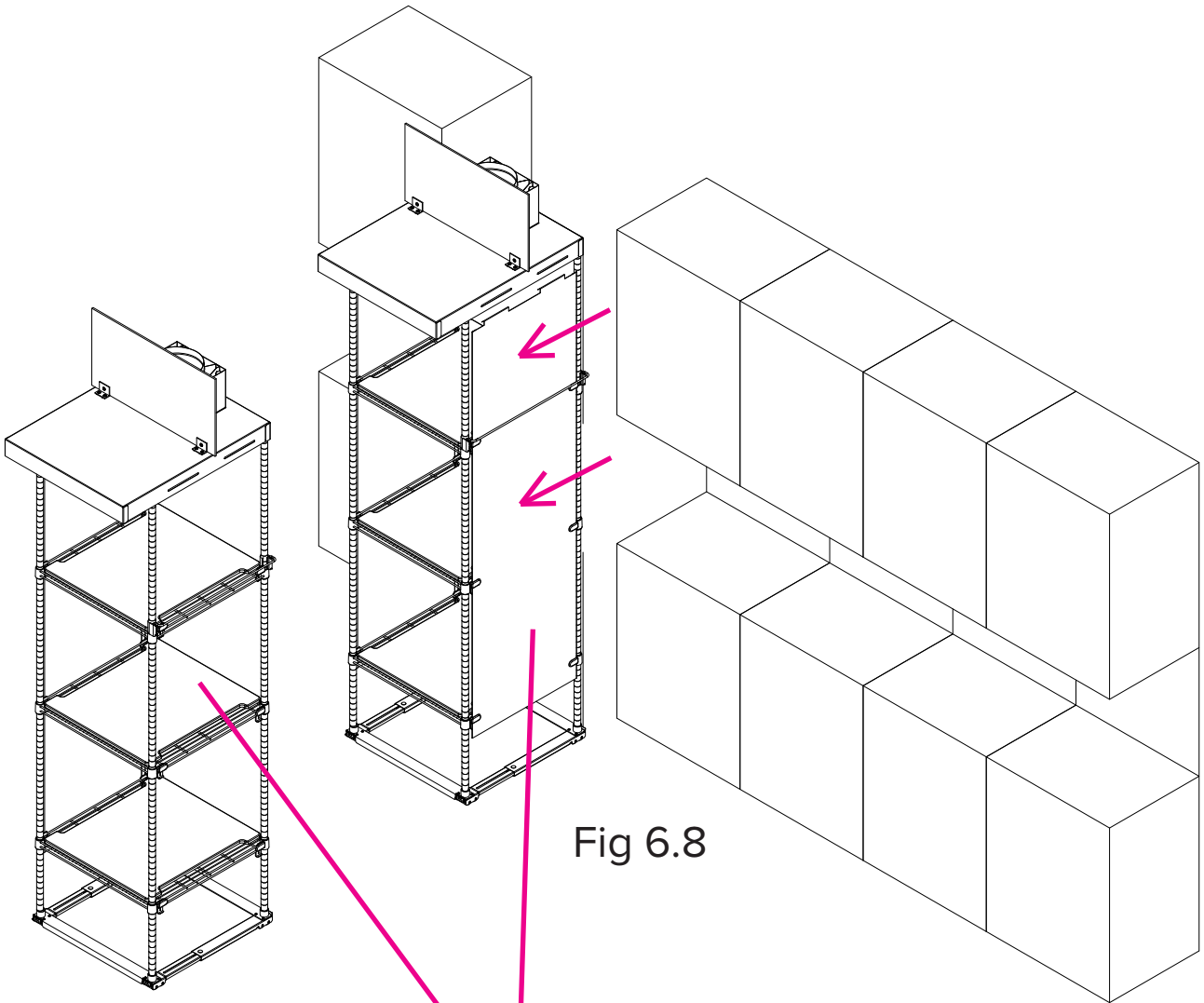

Fig 6.8

Fig 6.8a

Remove panel & clips to access the dental equpiment.

9 - MAINTENANCE CONT'D

CLEANING:

METAL COMPONENTS:

Use mild detergent and water or any of the commercially available sprays, such as 409, Fantastic, or others, with a soft cloth or sponge. DO NOT USE ABRASIVES as these will permanently scratch the finish.

PLASTIC, RUBBER, AND PAINTED SURFACES:

Use mild detergent and water or any of the commercially available sprays, such as 409, Fantastic, or others, with a soft cloth or sponge. DO NOT USE ABRASIVES as these will permanently scratch the finish.

10 - PARTS LISTING

ACCESS PANEL MATERIALS LIST

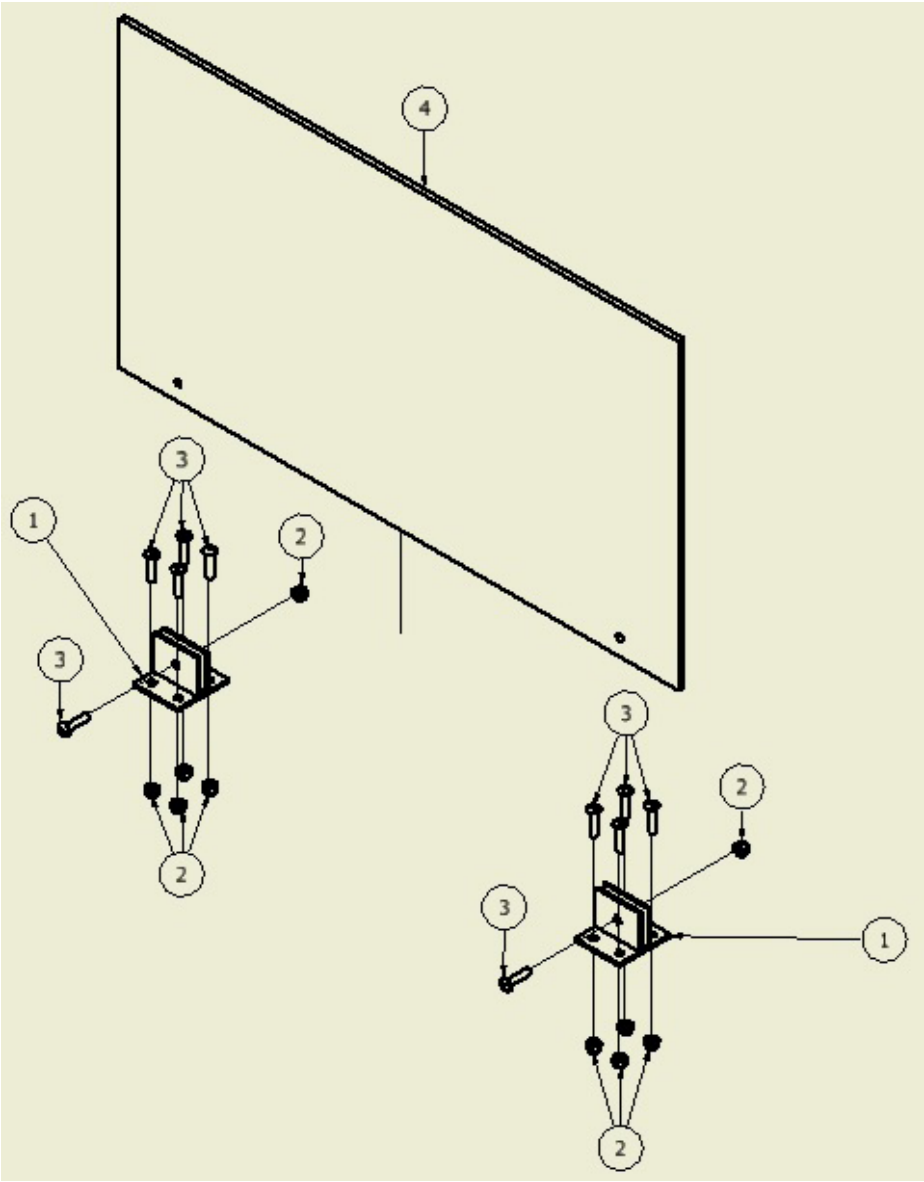

PARTS LIST			
ITEM	QTY	PART NUMBER	DESCRIPTION
1	2	500-034	1/4 " Center Bracket
2	10	257-375	1/4-20 NYLOCK NUT
3	10	257-309	1/4-20 x 1" PDPHMS
4	1	142-625	Steri Autoclave Access Panel Tall *

* If you have the Access Panel Short version the p/n is 142-626 “Steri Autoclave Access Panel Short”

10 - PARTS LISTING CONT'D

FUME HOOD MATERIALS LIST

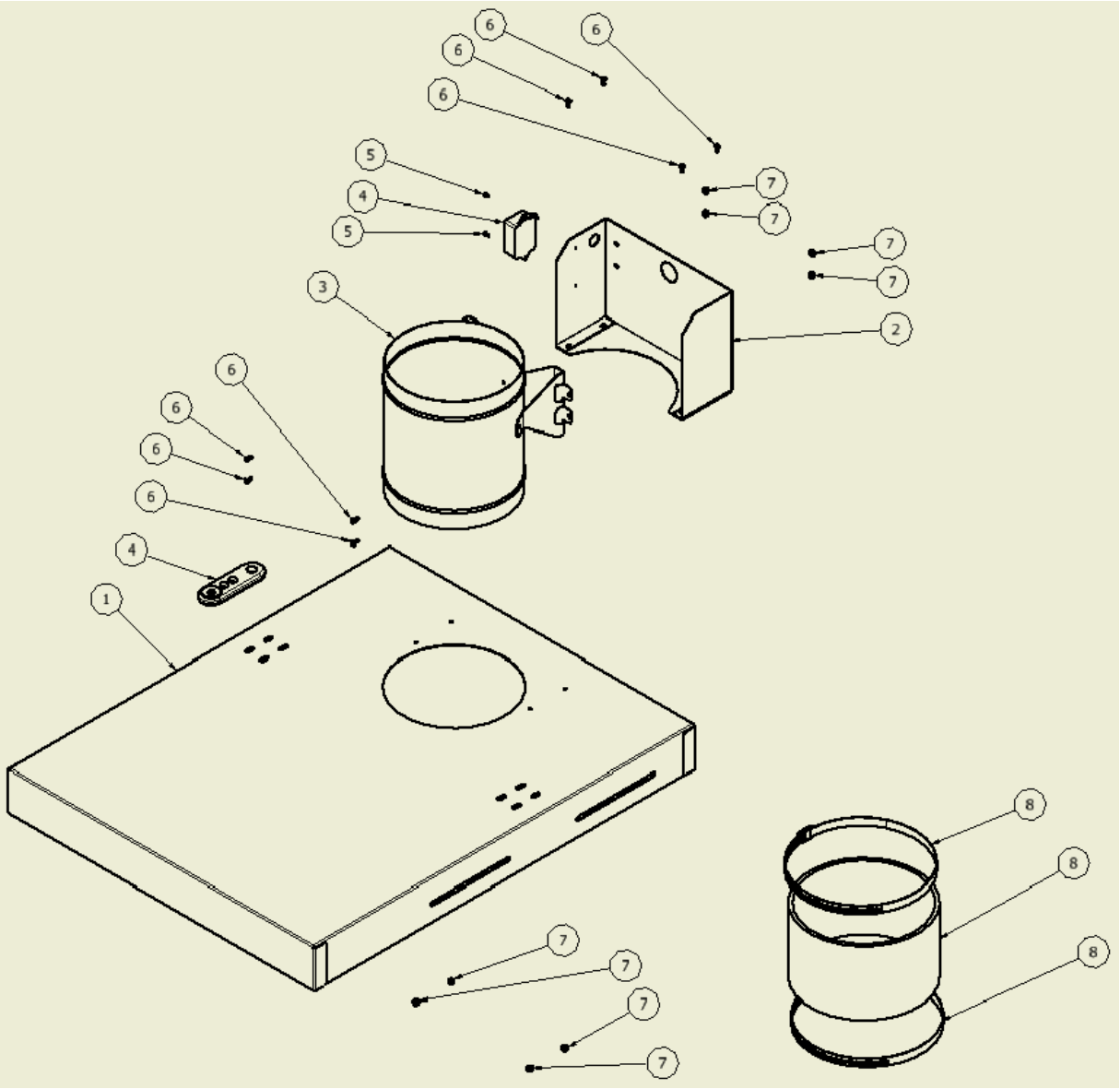

PARTS LIST			
ITEM	QTY	PART NUMBER	DESCRIPTION
1	1	151-942	HOOD, FUME
2	1	151-943	BRACKET, BLOWER MOUNT
3	1	500-006	AutoClave 8" Inline Duct w/ Speed Control Fan
4	2	500-009	AutoClave Wireless Remote Controller
5	2	257-005	4-40 1/4 ADBHMS
6	8	257-780	8-32 x 3/8" S.S. Pan Head Philips Screw
7	8	257-160	8-32 NYLOCK NUT
8	1	295-206	DUCT, 8" FLEXIBLE X 8' LONG (WITH CLAMPS

10 - PARTS LISTING CONT'D

AUTOCLAVE RACK MATERIALS LIST

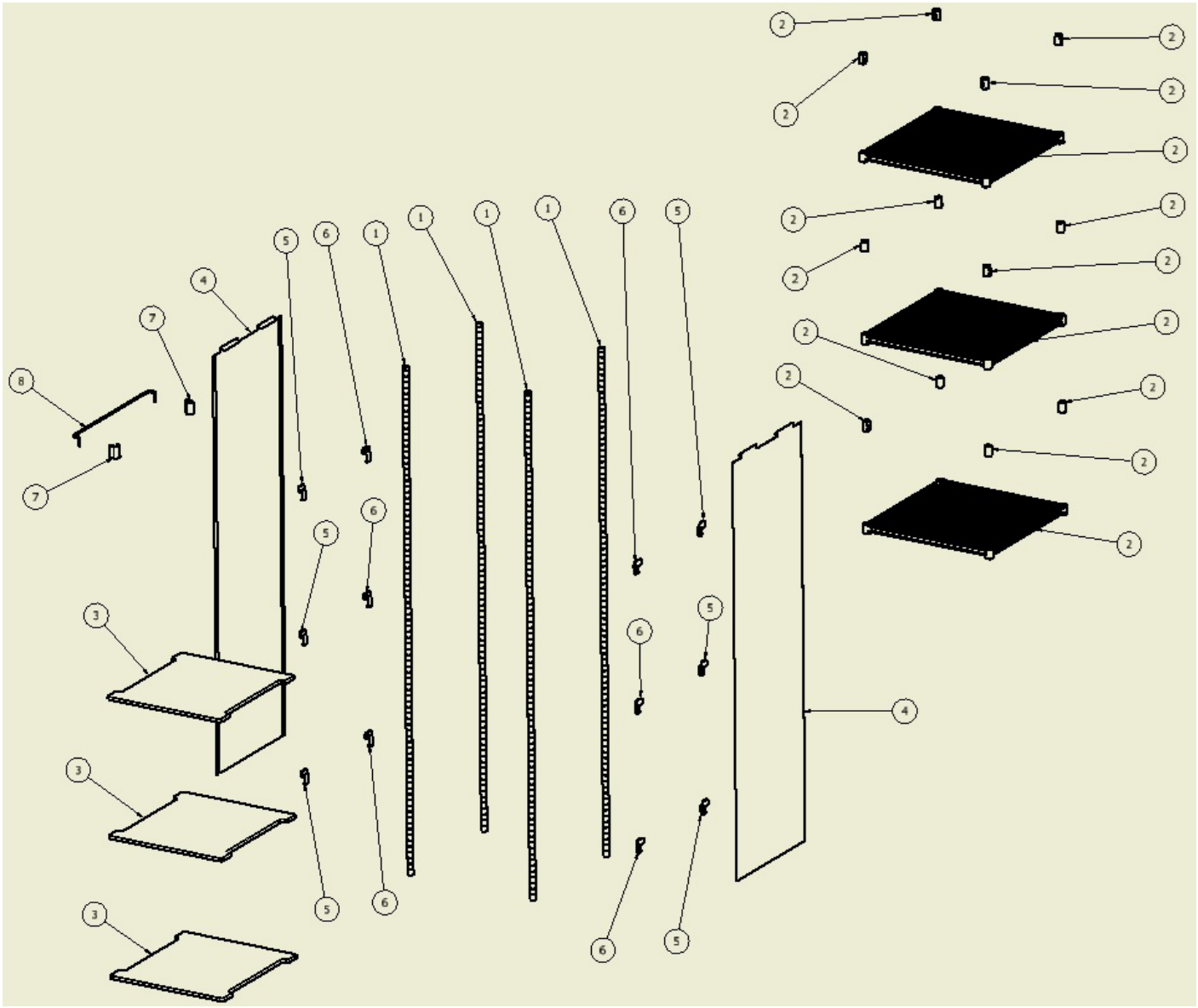

PARTS LIST			
ITEM	QTY	PART NUMBER	DESCRIPTION
1	4	500-018	Regency 86" NSF Stainless Steel Post *
2	3	500-017	Regency 24" x 24" NSF Stainless Steel Wire Shelf w/ Post Clips
3	3	153-661	SHELF, AUTOCLAVE RACK
4	2	151-944	PANEL, SIDE WALL
5	6	153-768	Autoclave Panel Clips "B"
6	6	153-767	AutoClave Panel Clip "A"
7	2	153-783	Towel Rack Clip
8	1	152-947	BAR, WRAP HOLDER

* If you have the shorter Autoclave Rack pole, the p/n is 500-036 "80 inch NSF Stainless Steel Post"

10 - PARTS LISTING CONT'D

ROLLER RACK MATERIALS LIST

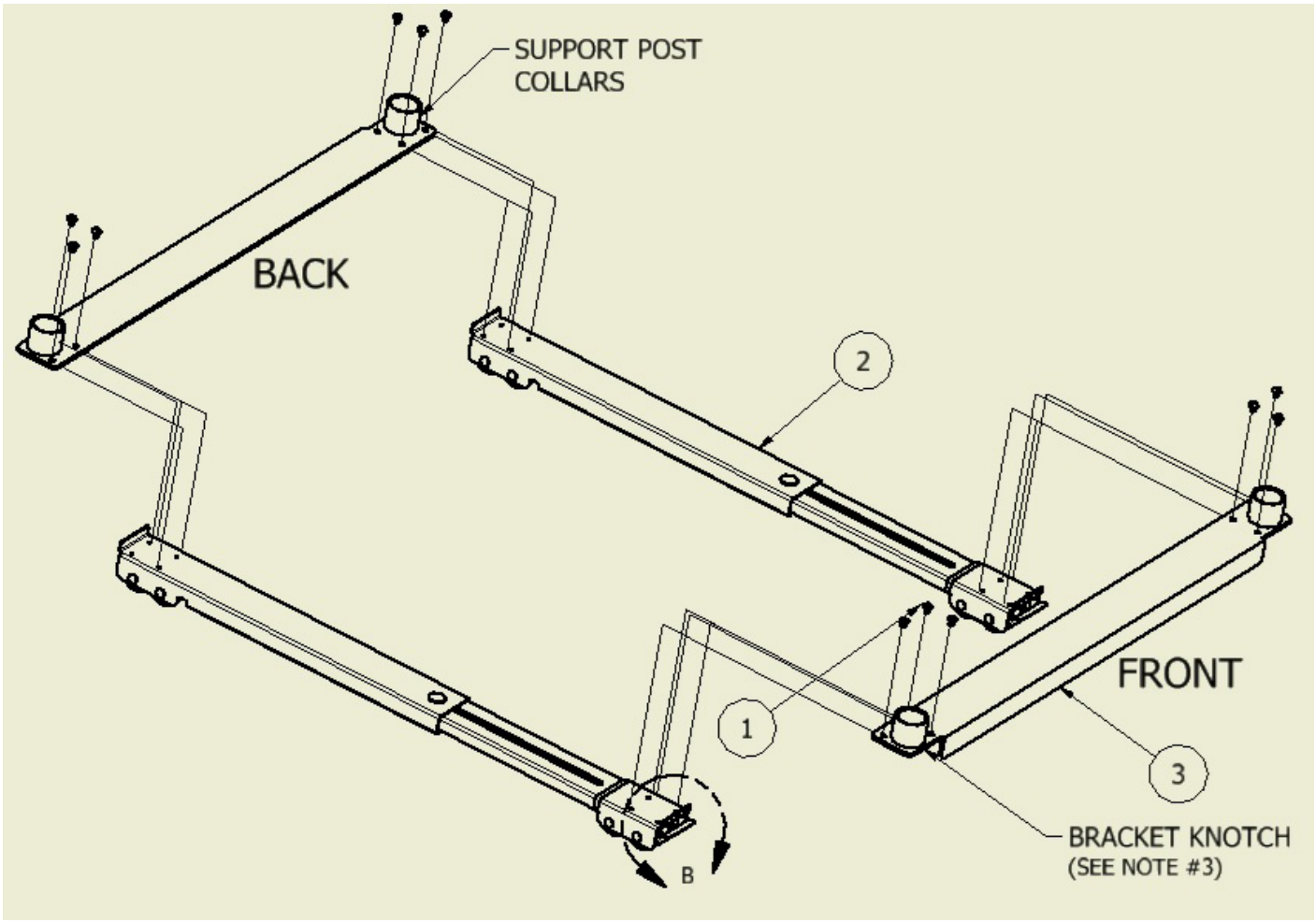

PARTS LIST			
ITEM	QTY	PART NUMBER	DESCRIPTION
1	12	257-682	10-32 X 1/4 Button Head Screw
2	2	500-008	ASSEMBLY, AUTOCLAVE RACK ROLLER
3	2	700-545	S/A, AUTOCLAVE RACK ROLLER BRACKET