ergonomic products

Performance Without Compromise™

INSTALLATION AND OPERATIONS MANUAL

C1D5: 30” Triple Bachman Lab Case Pulldown

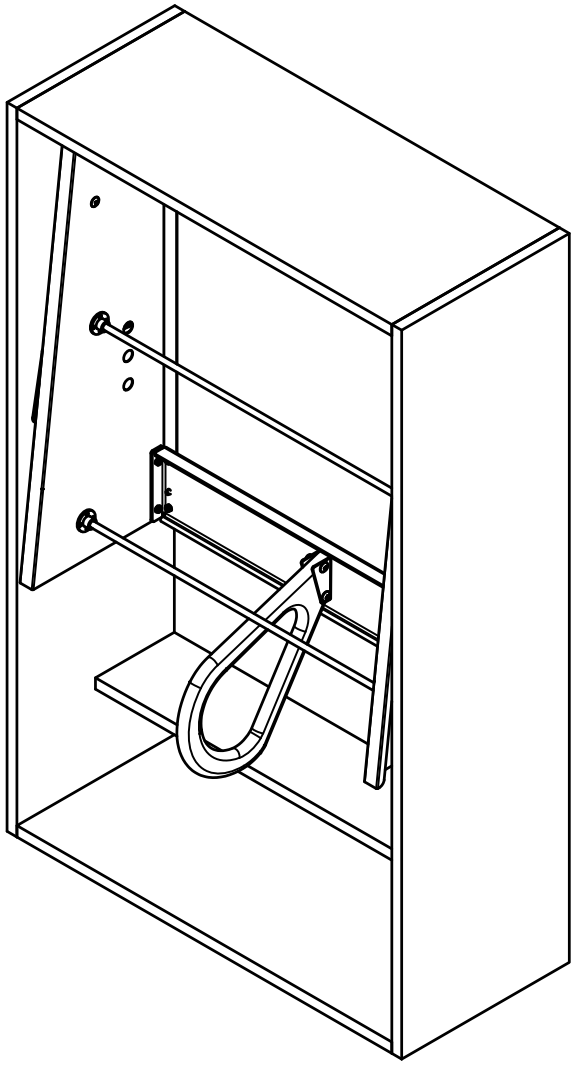

Product ID: C1D5

950-168 Manual: B

Thank you for purchasing the Ergonomic Products C1D5: 30” Triple Bachman Lab Case Pulldown.

Years of research by dentists, engineers, and designers have made this a uniquely effective product in the industry. We stand behind our equipment, and genuinely believe it to be the best available on the market.

Should you have any questions regarding the product’s installation or use, please don’t hesitate to call our customer service specialists at **1-866-ERGO-4-US.** We may also be reached via email at **equip@ergonomic-products.com.**

We hope that you enjoy the benefits and quality of your new equipment and look forward to assisting you with your future needs as your practice continues to grow!

—The Ergonomic Products Team

CONTENTS:

1. Required Tools / Unpacking and Inspecting.....3
2. Specifications and Kit Contents.....4
3. Framing.....5
4. Installation.....6
5. Using the pulldown.....8
6. Maintenance.....15

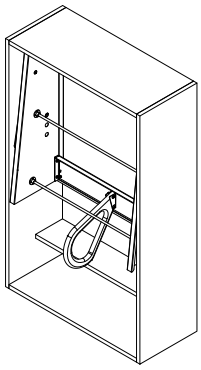

QUESTIONS?

Call our Customer Service Specialists at:

1-866-ERGO-4-US

1 – REQUIRED TOOLS / UNPACKING AND INSPECTING

REQUIRED TOOLS:

Long Phillips Head Screwdriver
Power Drill
Impact Driver
Construction Level
#8 2-1/2” wood screws for wood blocking. (not included)
#8 2-1/2” flat head self drill screws for sheet metal blocking *optional* (not included)

1. Inspect shipping container for visible damage upon arrival. If transit damage is found, contact Ergonomic Products immediately (this will expedite the corrective process).

2. Use safe lifting procedures to free the product from the container, and remove all packing material and accessory boxes from shipping container.

3. Lay individual components on clean surface to avoid scratching, and inspect contents. If damage is found, contact Ergonomic Products immediately.

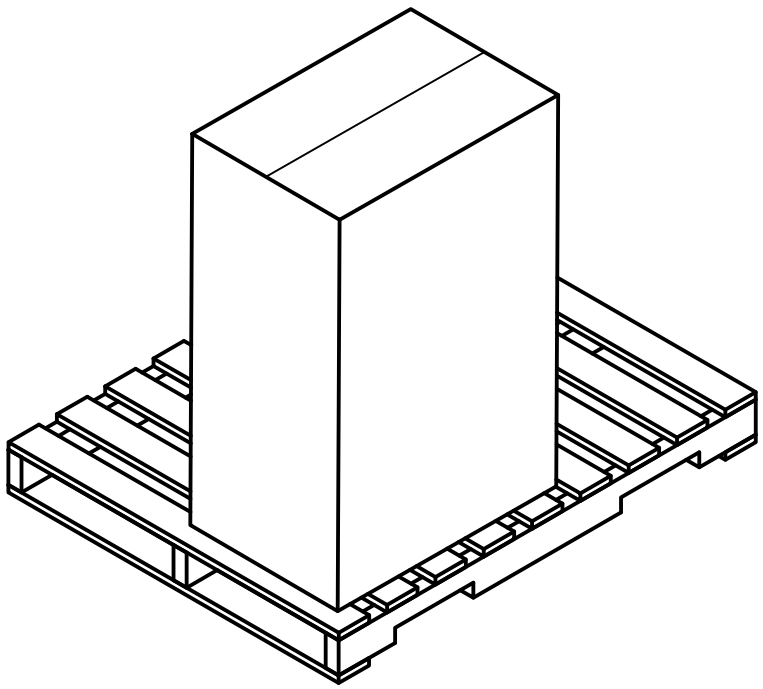

2 – SPECIFICATIONS AND KIT CONTENTS

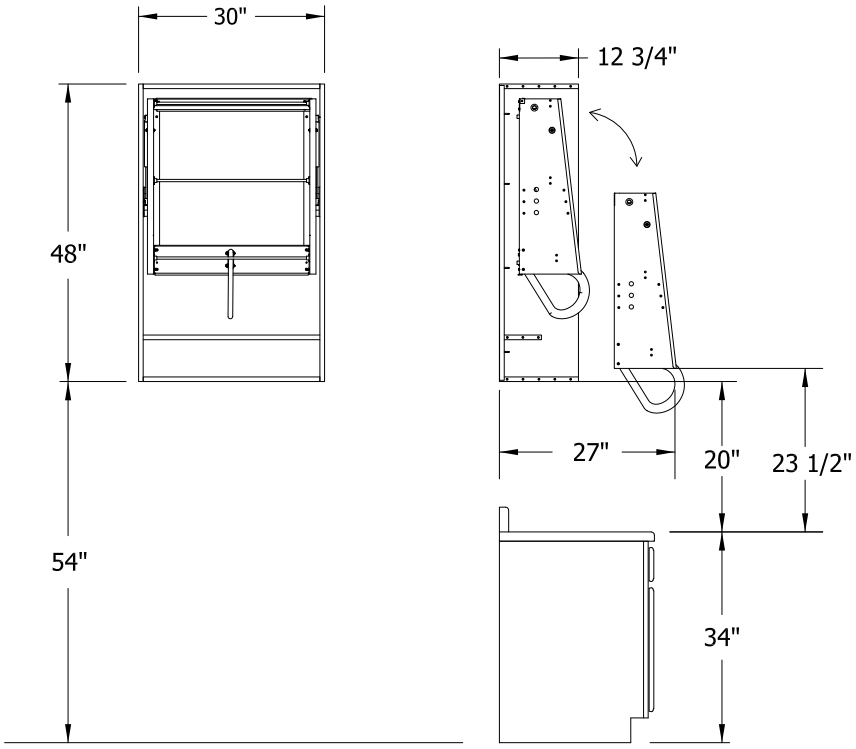

USAGE AND FEATURES

- Hydraulic pull-down shelving provides easy access to materials and management of Lab cases
- Maximizes use of vertical storage space without sacrificing safety.
- Open shelving allows for visual inventory. Know at a glance, see what you have and where it is.
- Easy to locate patient case(s)

PULLDOWN SPECS

- For ease of pulldown use, make sure the unit does not surpass 35lbs of weight or 11lbs per shelf.
- Total unit weight 88 lbs
- No Doors
- 3/8” Rod for hanging Pharmacy Bags

TAB DIVIDERS



CARD POCKETS



7.5” X 10” BAGS



9” X 12” BAGS



KIT CONTENTS

- Tab Dividers (25 per pack / 1 Full Alphabet sticker pack)
- Self-adhesive see-through card pockets (100 per pack)
- 7.5” x 10” Pharmacy Bags (30 pack)
- 9” x 12” Pharmacy Bags (30 pack)

NOTE: You will need to order more pharmacy bags if your practice has more cases needing storage.

You can purchase more kit supplies at any of the websites below.

Alphabet Lettering Hangers

- Amazon.com “Hanging Indexing Tab Dividers with Letters.”

Pack of self-adhesive see-through cards

- Demco.com “See-Through Card Pockets.”
- Amazon “Pack of self-adhesive see-through cards.”

Pharmacy bags

- Amazon.com “Monaco Pharmacy Hanging Bags.”
- Demco.com “Deluxe Monaco HangUp® Bags.”

3 – FRAMING

During the framing process, a 2”x 6” or equivalent cabinet blocking should be installed at 54” above the finished floor and again at 102” above the finished floor. This will provide necessary support for your Pulldown.

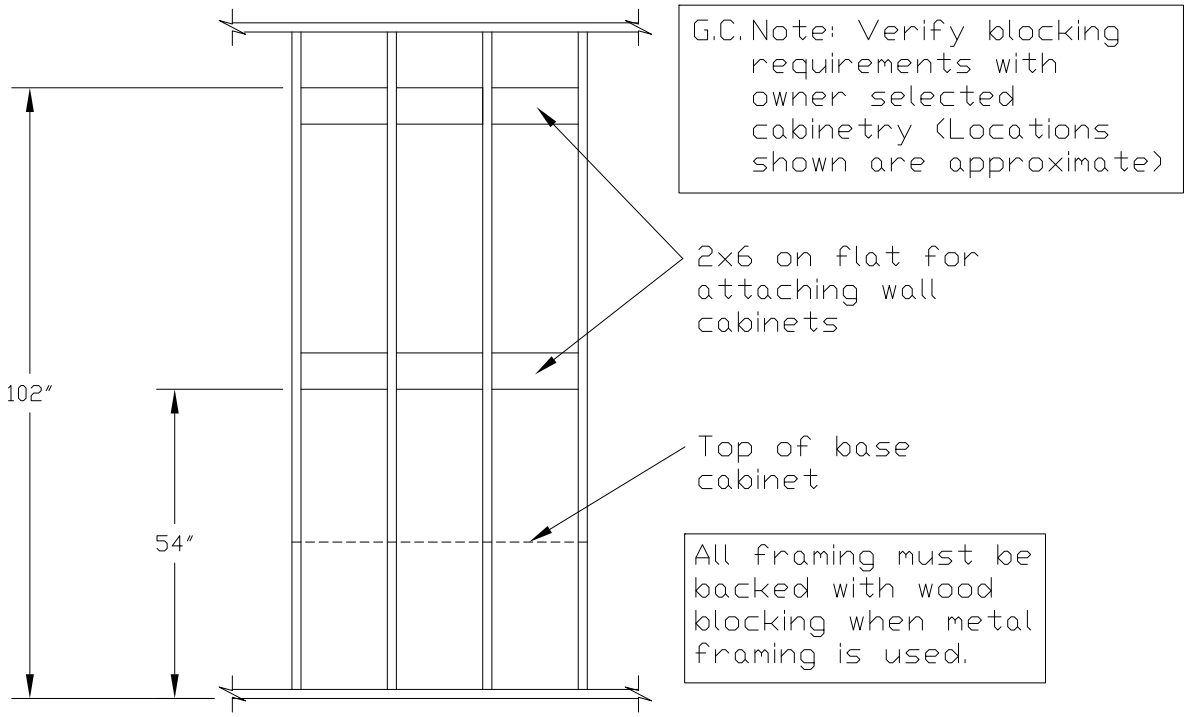

4 – INSTALLATION

1. Position the bottom of the cabinet 54” above the finished floor, or align tops with adjacent cabinets where indicated on the elevation. This height is required for proper use of the pulldown fixture.

2. Make sure unit is level.

3. Using eight #8x2-½” screws, secure the cabinet into the cabinet blocking through the cleats of the cabinet. Use four screws along the top, and then three along the bottom as shown below.

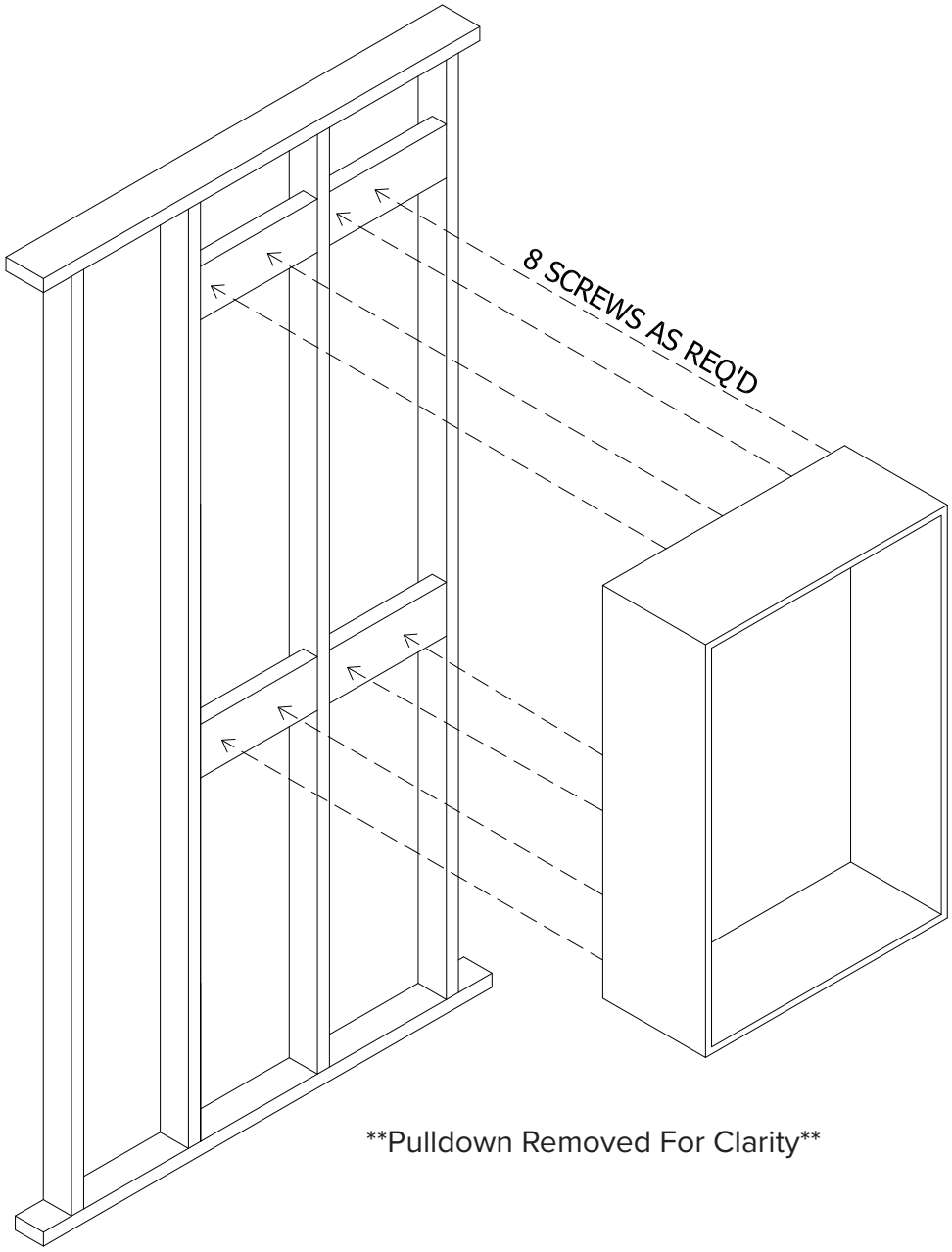

Pulldown Removed For Clarity

4 – INSTALLATION CONT’D

INSTALLATION WITHOUT CABINET BLOCKING:

Although it is our recommendation to install the Triple Pulldown using the cabinet blockings, it is possible to install without them.

1. Position the bottom of the cabinet 54” above the finished floor centering the cabinet horizontally over two (2) studs. This will allow for proper spacing.

2. Make sure the unit is level.

3. Secure the cabinet using eight (8) #8x 2-½” screws into the studs with four (4) screws spaced evenly down the left side and four (4) screws spaced evenly down the right side.

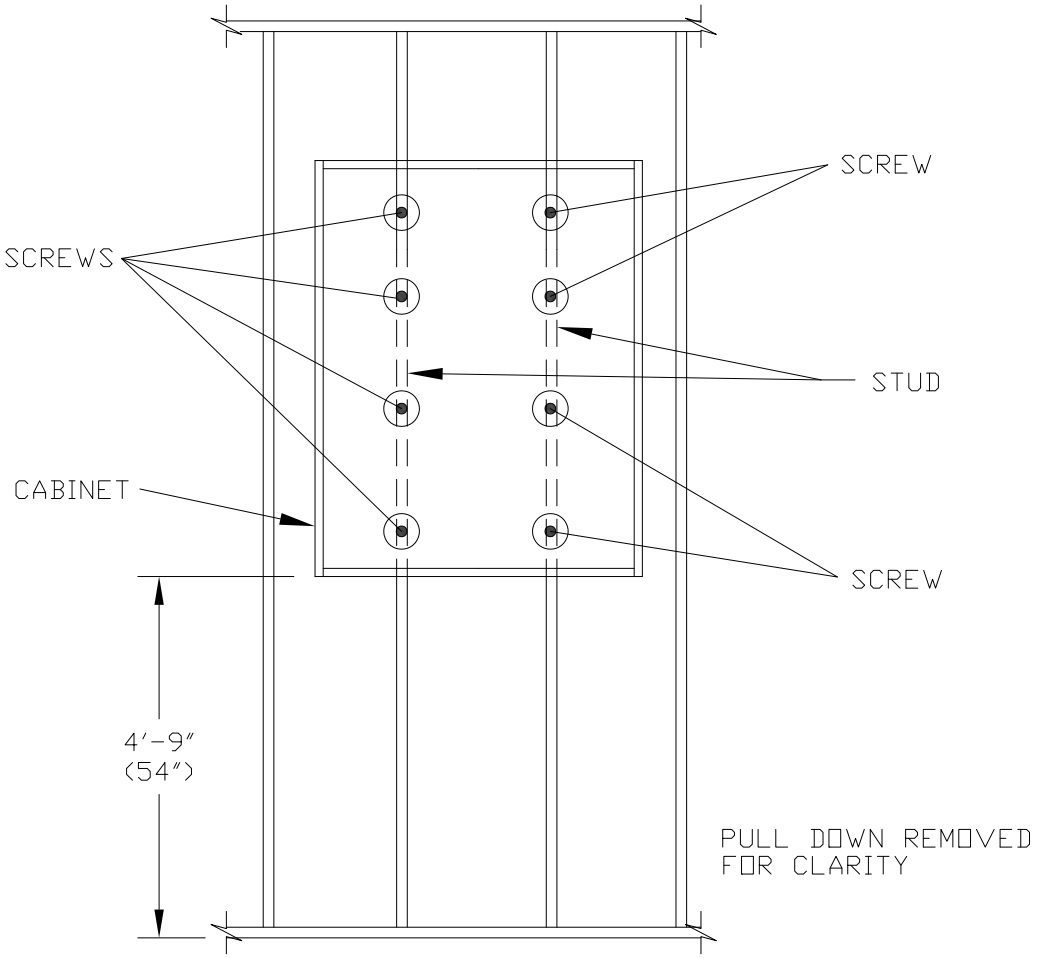

5 - USING THE PULLDOWN

Grasp the handle from the pulldown and pull “towards” you and then “downward” as shown in Fig 5.1 and Fig 5.2.

NOTE: *When loading the pulldown for the first time you will need to hold it in place until enough weight is applied. The pulldown will stay in place once weight is added and positioned fully out from the cabinet.*



FIG 5.1



FIG 5.2

The Alphabet hanger is used to easily locate patient cases. The front of the hanger is used to place a letter, and the side has a slot for the rod to clip onto see Fig 5.3. The Alphabet hanger kit comes with an adhesive letter pad Fig 5.4. Peel a letter off of the pad and place it on the front of the hanger as shown in Fig 5.5.



FIG 5.3

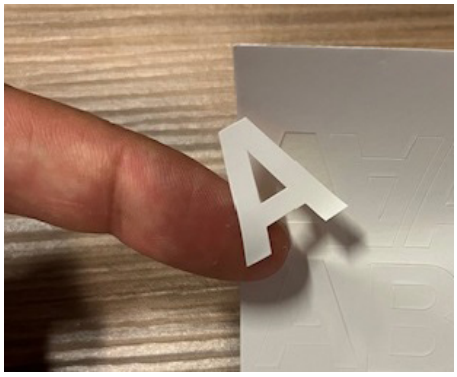

FIG 5.4

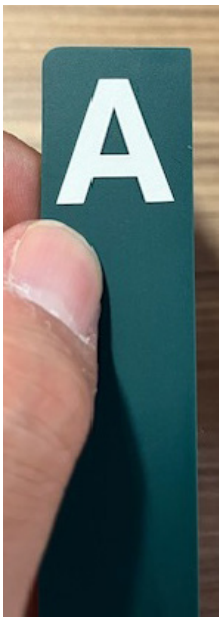

FIG 5.5

5 - USING THE PULLDOWN CONT’D

Once the alphabet hanger has a letter it is ready to be placed on the hanger rod. Place the alphabet hanger on the hanger rod through the slot. Be sure you “snap” it into place on the rod as shown in Fig 5.6 and Fig 5.7.

FIG 5.6



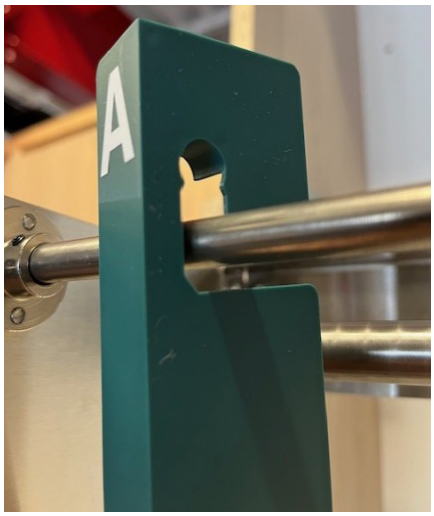

FIG 5.7





There are three hanger rods on the triple Pulldown that can be used to hang lab cases in any configuration you want.

5 - USING THE PULLDOWN CONT’D

To prep the Pharmacy Bag take the Card Pocket and open the sleeve and insert any patient or case work information (Fig 5.8). Peel back the plastic film (Fig 5.9) and stick the adhesive side on the Pharmacy Bag as shown in Fig 5.10. Remove the other side of the plastic film and secure the Card Pocket in place (Fig 5.11).



FIG 5.8



FIG 5.9



FIG 5.10



FIG 5.11

5 - USING THE PULLDOWN CONT’D

To insert items into the Pharmacy Bag open the bag by prying apart the plastic hanger as shown in Fig 5.12, Fig 5.13, and Fig 5.14.

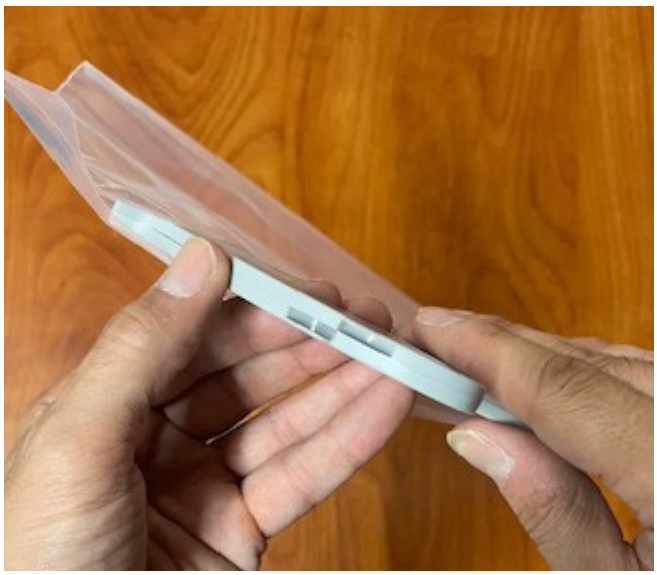

FIG 5.12



FIG 5.13



FIG 5.14

5 - USING THE PULLDOWN CONT’D

Once the Pharmacy Bag has been labeled and filled it’s ready to be hung. Place the Pharmacy Bag on the hanger rod as shown in FIg 5.15 and Fig 5.16.



FIG 5.15

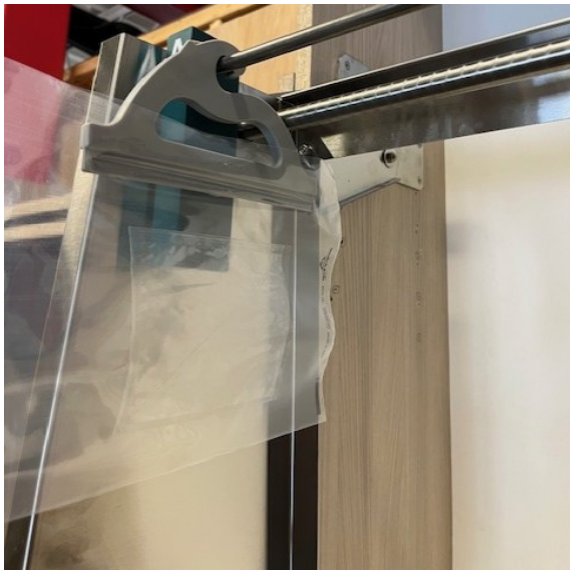

FIG 5.16

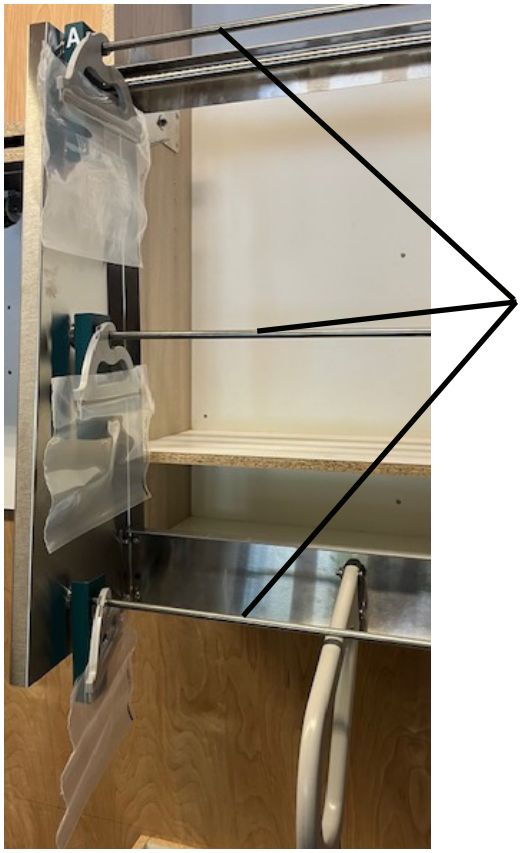

There are three hanger rods on the triple Pulldown that can be used to hang lab cases in any configuration you want.

5 - USING THE PULLDOWN CONT’D

SUGGESTED HANGING CONFIGURATION

The suggested method of hanging the Pharmacy bags is by “staggering” them. For example if starting with a small bag, use the larger bag next, see Fig 5.17. You can always start off with any bag size you want but to maximize space its suggested to “stagger” the Pharmacy bags.



FIG 5.17



5 - USING THE PULLDOWN CONT’D

The pull-down mechanism requires 5–11 lbs. of weight on each shelf to operate properly.

If the shelves are empty, the mechanism will not stay in the lowered position and will retract quickly into the cabinet.

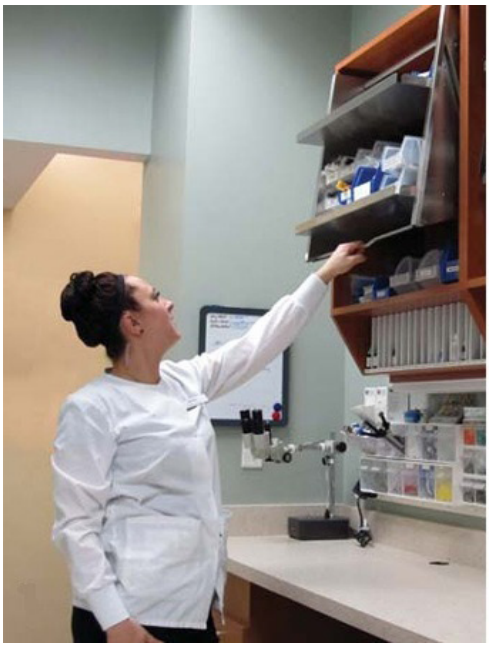





6 - MAINTENANCE

CLEANING:

METAL COMPONENTS:

Use mild detergent and water or any of the commercially available sprays, such as 409, Fantastic, or others, with a soft cloth or sponge. DO NOT USE ABRASIVES as these will permanently scratch the finish.

PLASTIC, RUBBER, AND PAINTED SURFACES:

Use mild detergent and water or any of the commercially available sprays, such as 409, Fantastic, or others, with a soft cloth or sponge. DO NOT USE ABRASIVES as these will permanently scratch the finish.