ergonomic products

Performance Without Compromise™

Installation and Operations Manual

D1E Series: Stratus Workstation™

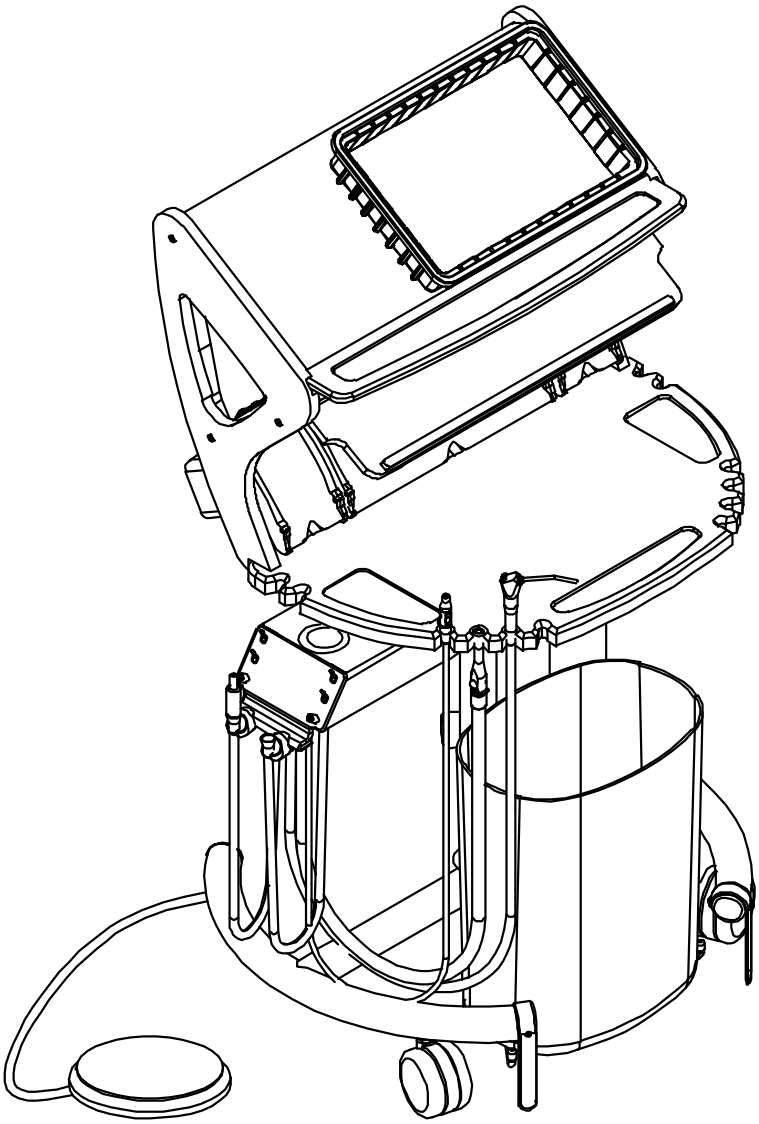

Configurations may vary.

Product ID: D1E

Manual version: H

Thank you for purchasing the Ergonomic Products D1E Series Stratus Workstation™.

Years of research by dentists, engineers, and designers have made this a uniquely effective product in the industry. We stand behind our equipment, and genuinely believe it to be the best available on the market.

Should you have any questions regarding the product's installation or use, please don't hesitate to call our customer service specialists at **1-866-ERGO-4-US.** We may also be reached via email at **equip@ergonomic-products.com.**

We hope that you enjoy the benefits and quality of your new equipment and look forward to assisting you with your future needs as your practice continues to grow!

—The Ergonomic Products Team

CONTENTS:

1. Introduction 3
2. Basic Anatomy of the Workstation 5
3. Specifications 6
4. Power Channel Face Plate 7
5. Rear and Underside of Channel 9
6. Foot Pedal 11
7. Options for Workstation 12
8. Using Your Workstation 13
9. Required Tools / Unpacking and Installation 21
10. Standard Parts List 22
11. Workstation Assembly 23
12. Umbilical Installation 25
13. Umbilical Connections 27
14. Worksurface Height Adjustment 31
15. Troubleshooting 32
16. Maintenance 33

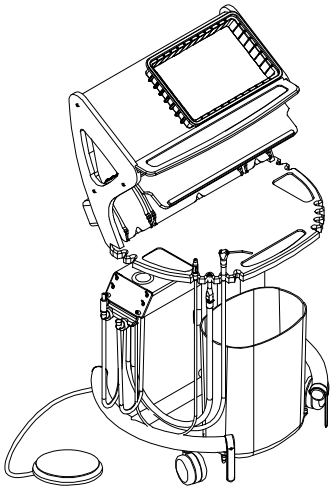

QUESTIONS?

Call our Customer Service Specialists at:

1-866-ERGO-4-US.

1 – INTRODUCTION

SYMBOLS USED IN THIS MANUAL AND ON PRODUCT LABELS:

SYMBOL	MEANING
	You must refer to the documentation that came with your device.
	Indicates a Warning. Warnings alert the user to the possibility of serious injury or death if the equipment is not operated properly.
	Indicates that the device is a Type B piece of equipment and has a certain degree of protection against electric shock. The B Type refers to applied parts that are generally not conductive and can be immediately released from the patient.
	Indicates that you must not dispose of any electronic components along with general waste.
	Appears next to the manufacturer's contact information.
	Appears next to the date of manufacture.
	Indicates Pushing Prohibited

1 – INTRODUCTION cont'd

INTENDED USE
The Ergonomic Products Workstation is a dental operative unit, which is an AC-powered device that is intended to supply power to and serve as a base for other dental devices and accessories. The device is to be operated and used by dentists and other legally qualified professionals.

CONTRAINDICATIONS
There are no known contraindications for the use of this device.

WARNINGS AND PRECAUTIONS
Warnings alert the user to the possibility of serious injury or death if the equipment is not operated properly.

Only properly trained and authorized personnel must use this equipment.

Do not modify this equipment without authorization from Ergonomic Products, Inc.

Read and understand all warnings, precautions, and operating instructions before use.

To avoid risk of electric shock, connect this equipment only to an electrical supply with a protective earth ground. Do not bypass the grounding circuitry.

The device might cause interference with other electronic devices while in use. Ensure that other medical devices used in the treatment office do not receive interference from this device.

A dental unit might include magnets which might affect the function or programming of some implantable pacemakers or defibrillators. People who have devices programmed to respond to a magnet must avoid dental units with magnets.

Improper installation of the syringe can result in injury or damage. Refer to the syringe manufacturer's documentation for instructions on proper installation and use.

Do not position equipment so it is difficult to operate the disconnect device.

Do not use a socket multiplier or an extension cord to connect the Workstation to the electrical supply.

To avoid the risk of electric shock, do not connect equipment that must be connected a multi-socket outlet with a separating transformer directly to an electrical wall outlet.

Connect only those items that are part of the Workstation or have been approved by Ergonomic Products, Inc. to be compatible with the Workstation.

It is mandatory that metal reusable syringe tips are sterilized between each patient to prevent cross contamination. Please follow the manufacturer's recommended practices for sterilization.

2 – BASIC ANATOMY OF YOUR WORKSTATION

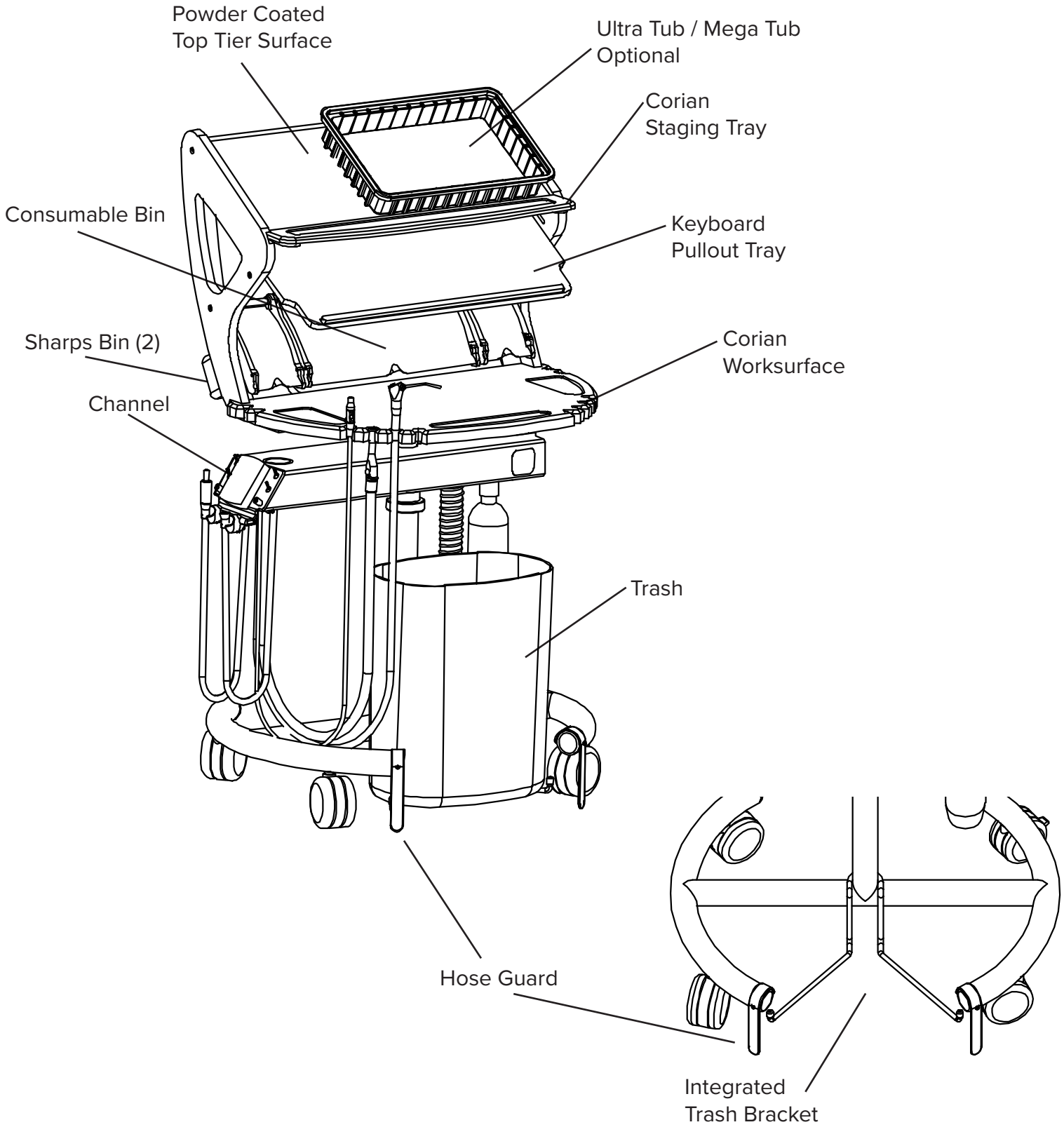

3 – SPECIFICATIONS

STANDARD FEATURES:

- 1 High Speed Air
- 1 Low Speed Air
- 1 Air-Driven Handpiece
- 1 A/W Syringe
- 1 EP Mega Tub
- 1 EP Consumable Bin
- 1 EP Biohazard Bin
- 2-Liter Water Bottle
- Standard Foot Pedal
- Power Channel swings 180° for complete left/right convertibility.
- Keyboard Slide
- Rear Auxiliary Air/Water Ports
- Rear Panel 120V Power/USB
- Quick Connect™ Umbilical Connection
- 1 Recessed Bur Dents
- Waste Receptacle
- Corian Staging Tray
- Powder Coated Top Tier / Magnetic Surface
- 2nd HVE
- Cure Light
- 1 HVE
- 1 Saliva Ejector

OPTIONAL FEATURES:

- Bien Air Electric Hand Piece (1st and/or 2nd Position)
- Fiber Optic Upgrade includes Light Kit, And (1 or 2) 5 or 6 pin Hose
- 2nd High Volume Suction
- 3rd High Volume Suction
- 3rd Air Driven Handpiece
- 2nd Air/Water Syringe
- Dedicated Air Syringe
- City Water configuration
- 3rd HVE
- Scaler
- Left/Right Recessed Bur Detents Milled Into Surface
- 1L Water Bottle

DIMENSION SPECIFICATIONS:

ELECTRICAL SPECIFICATIONS*:
Electric 120VAC, 60HZ, 8A
Fuse Value Label at Point of Use
CONFORMS TO:
US/ANSI/AAMI ES60601-1 2005+C1+A2
CA/CNCSA-C22.2 No. 60601-1
AIR, WATER, ELECTRIC AUXILIARY:
Air, 3/8 Dental Style Female QD, 80 psi
Water, ¼ Dental Style Female QD, 30-35 psi
Electric Outlet, 120VAC. 60HZ, 4A*
STORAGE AND TRANSPORTATION CONDITIONS:
-30° C to +50 C
10% to 90% Relative Humidity
Standard Atmospheric Pressure
USE CONDITIONS:
Typical Dental Office Environment
Standard Atmospheric Pressure
MATERIALS:
Corian Solid Surface, Aluminum, Stainless Steel, Powder-Coated Steel

*Refer to specific manufacturer's documentation or the actual transformer for input and output voltages, amp ratings, and Hz ratings.

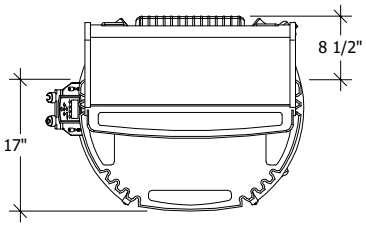

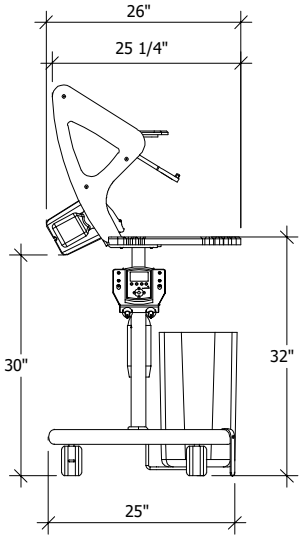

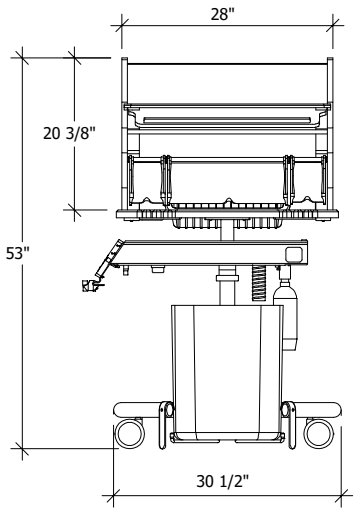

4 – POWER CHANNEL FACE PLATE

Depending on your configuration, the face plate on the power channel may vary. Below are the different faceplate configurations and their functions.

ASSISTANT FACE PLATE

PNEUMATIC FACEPLATE

PNEUMATIC FACEPLATE w/ EMS Scaler

BIEN AIR OPTIMA MX FACE PLATE

BIEN AIR OPTIMA MX FACE PLATE w/ EMS Scaler

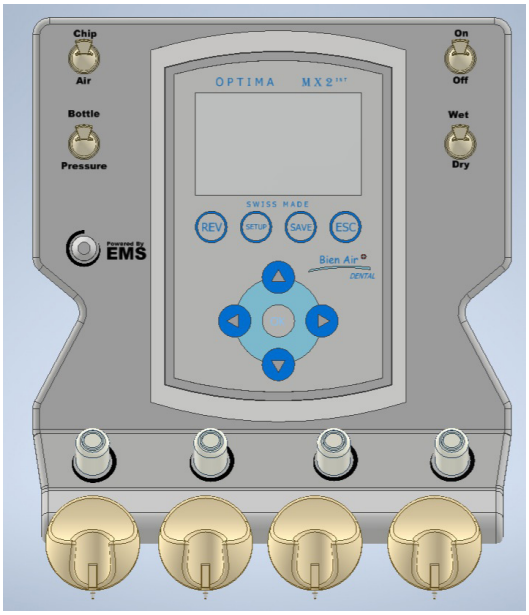

4 – POWER CHANNEL FACE PLATE cont'd

FUNCTION:	DESCRIPTION:
Chip Air	Turning this switch on allows chip air coolant (or water coolant atomizing air) to spray when the foot pedal is depressed. When switch is turned off no air is emitted at head of handpiece.
Bottle/Off	Pressurizes bottle and routes bottle water to devices. When turned to off position, relieves bottle pressure and turns on optional city water, if connected to source.
Flow 1	Adjusts the amount of coolant water that flows through the left handpiece. Turn the knob counterclockwise to increase the flow and clockwise to decrease the flow.
Master On/Off	Turns on and off the air pressure and water pressure to the workstation. **CAUTION:** Turn the master switch off when unit is not in use to prevent accidental water flow.
Wet/Dry	Turns on or off the flow of coolant water to the handpieces. This control must be on to allow water to flow to either of the Handpiece Coolant Flow controls. The Chip Air switch should always be on when this switch is set to the Wet position.
Flow 2	Adjusts the amount of coolant water that flows through the right handpiece. Turn the knob counterclockwise to increase the flow and clockwise to decrease the flow.
Purge	Clears lines and hose tubing.

5 – REAR AND UNDERSIDE OF CHANNEL

The below image shows the rear of the channel and its available functions (please note that options on your channel may differ from those shown below).

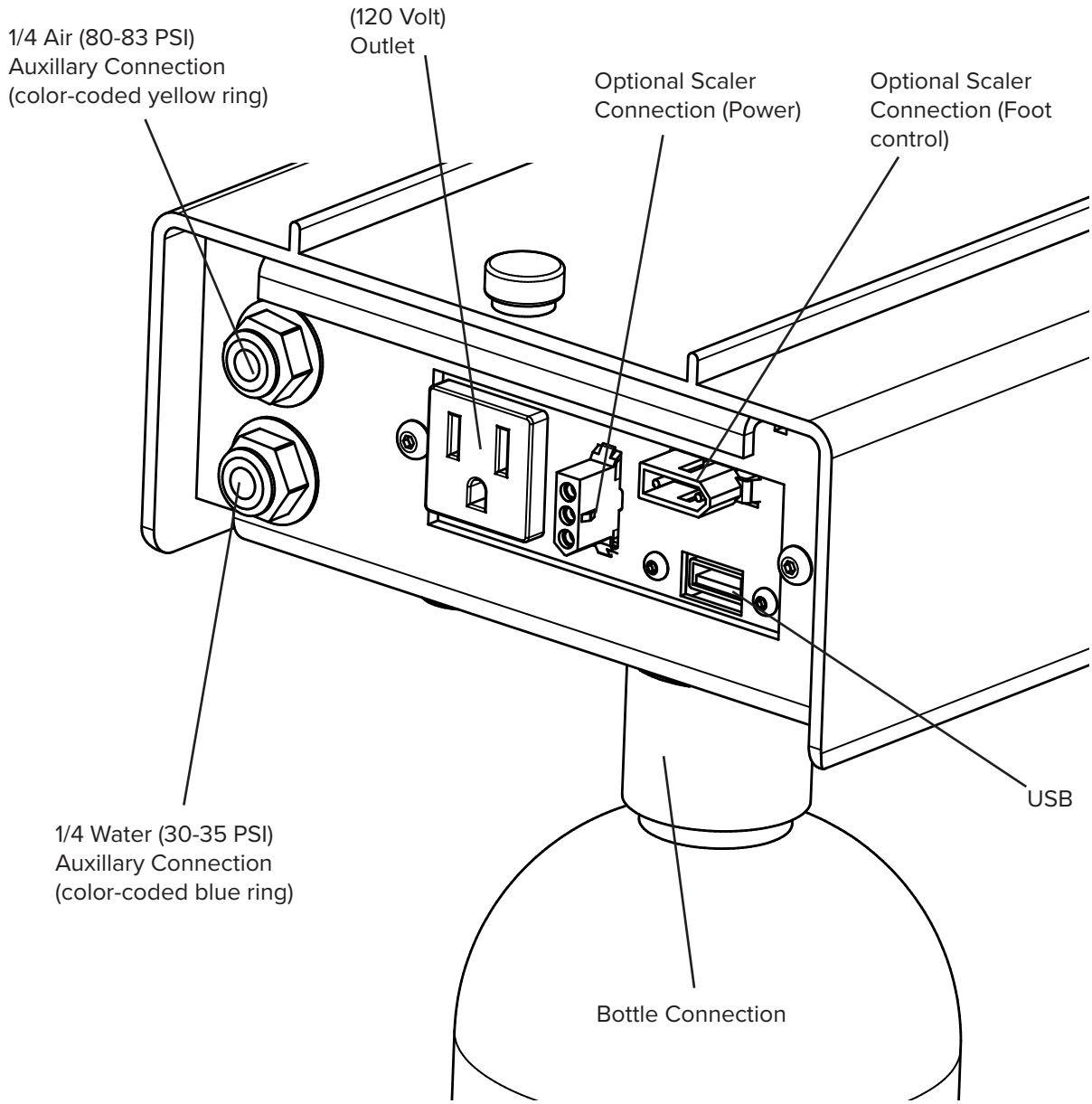

5 – REAR AND UNDERSIDE OF CHANNEL cont'd

The below image shows the undercarriage of the channel and its available functions (please note that options on your channel may differ from those shown below).

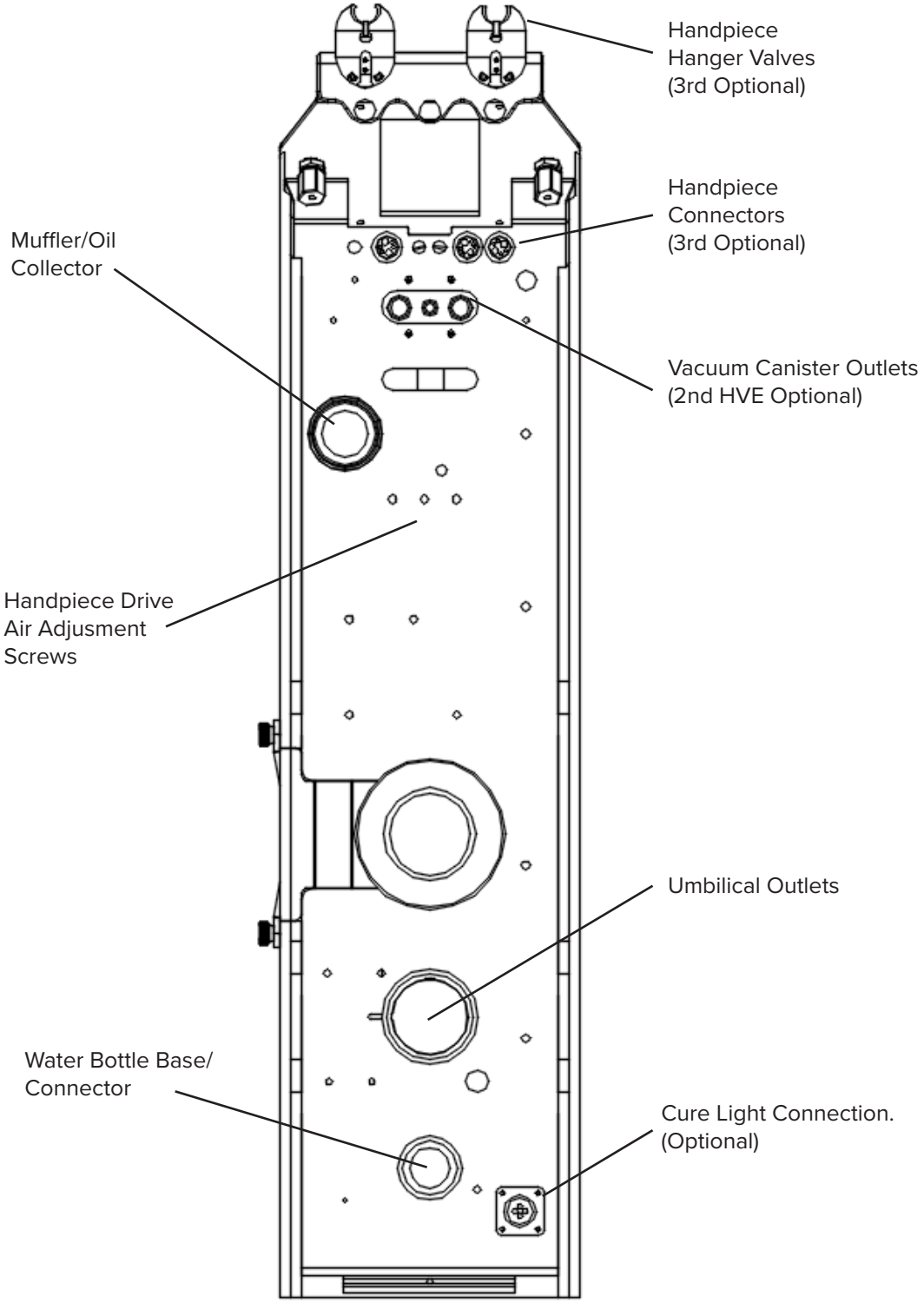

6 – FOOT PEDAL

Refer to Fig 6.1 to review your foot pedal type.

Fig 6.1

Standard Foot Pedal
Drive Air

Dual Button Foot Pedal
Turbo Sensor

Refer to Fig 6.2 for a detailed view of the rheostat running through the floor to the toe of the chair.

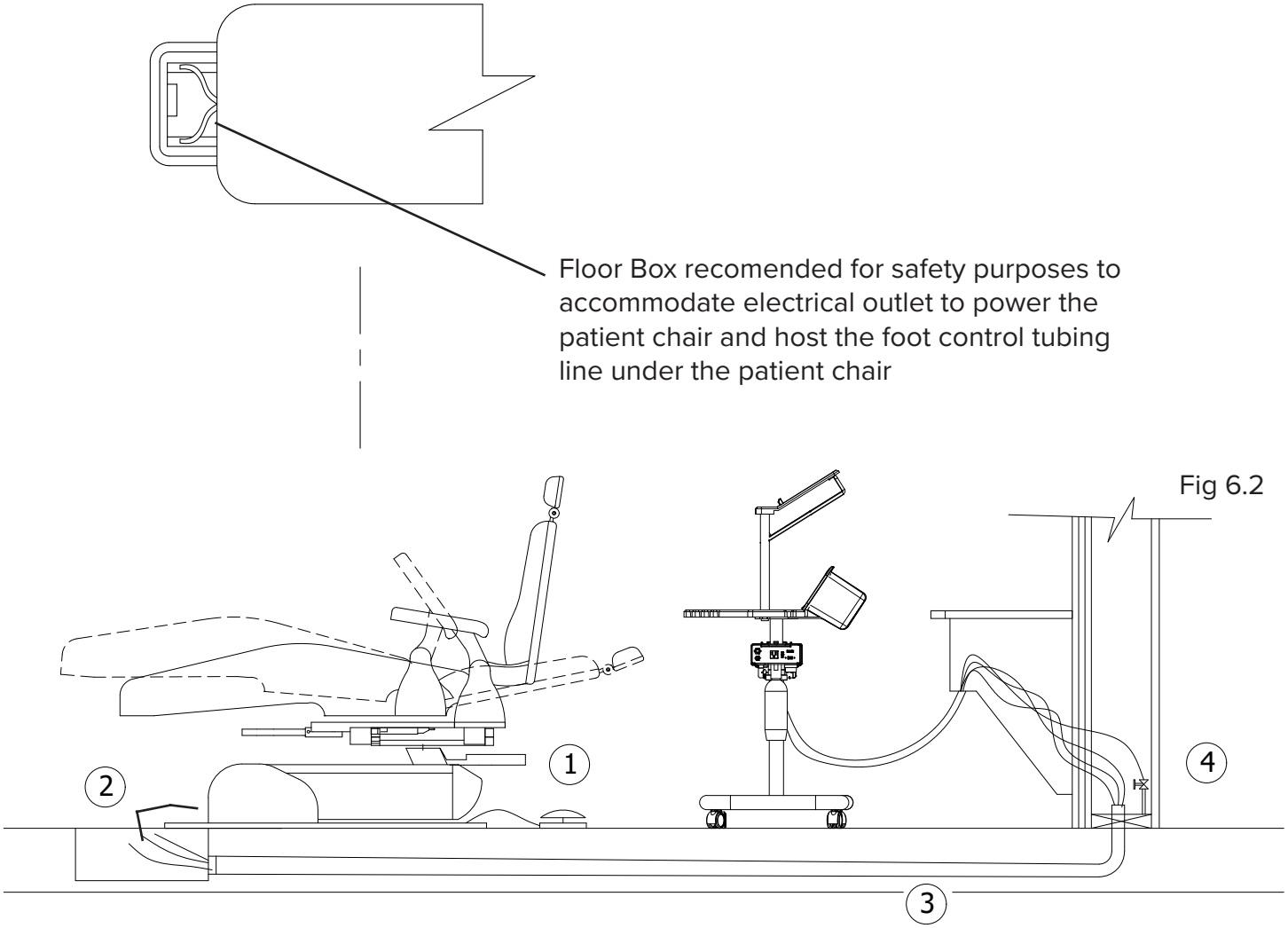

Fig 6.2

Foot pedal tubings (1) need to be extended to run from floor box (2) through the underfloor conduit (3) to the bottom of the headwall (4).

7 – OPTIONS FOR YOUR WORKSTATION

CURING LIGHT:

If Curing Light is provided, refer to manufacturer's documentation for proper operation of the curing light for the workstation.

UMBILICAL QUICK DISCONNECT:

The umbilical quick disconnect is typically installed in the cabinet behind the workstation. It allows for easy removal of mechanicals for repairs or upgrades, or for wheeling the entire workstation out of the room for building maintenance such as floor work.

HANDPIECE COMPATIBILITY:

The delivery system of the Ergonomics Products Workstation has been designed to be compatible with air driven handpieces that conform to ISO 13294.

Tubing for air driven handpieces is available in 4-5 hole ISO B tubing or 6-hole ISO C tubing. The end user has responsibility to acquire appropriate handpieces for use with the Workstation. Your country might have certain regulations with regard to what handpieces are acceptable to use. Refer to your local dealer for more information.

**For instructions and details about accessories provided from other manufacturers, refer to their product documentation.*

8 – USING YOUR WORKSTATION

THE WORKSTATION AS HUB:

There are many benefits to delivery Workstations. All materials, handpieces, and instruments are consolidated into one highly-concentrated location. This markedly simplifies access and resupply for the doctor and assistant.

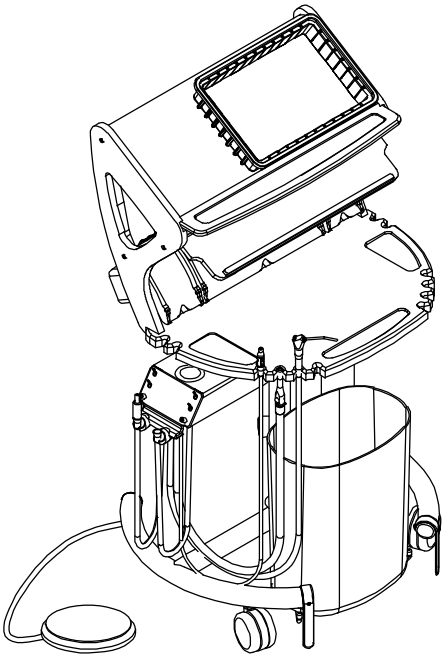

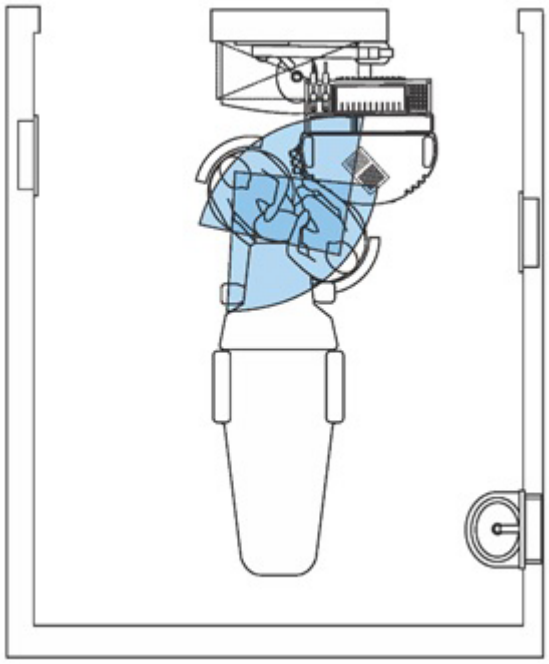

The Workstation may be moved and positioned for a doctor or assistant working alone. To do this, simply turn the Workstation to face the operator. The primary work surface allows the doctor a directly accessible area to have bur blocks, implant components, crown castings, and handpieces. The assistant also has all of the dental instruments by his or her side during procedures. The Workstation power channel's narrow width permits close positioning to the patient. Both the doctor and assistant have everything needed at their fingertips.

8 – USING YOUR WORKSTATION cont'd

BASIC PLACEMENT FOR CLINICAL DENTISTRY:

Your Workstation is designed to be more flexible then other delivery systems. The Workstation's placement is critical.

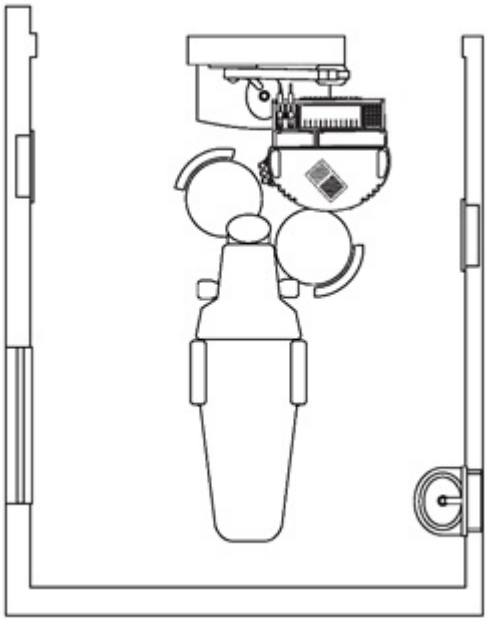

CORRECT POSITIONING:

Ideal placement of the Ergonomic Products Delivery System creates both an assistant's "Control Panel" and allows full access to supplies by the doctor.

In this position, hoses are able to comfortably reach the patient without dangling to the floor when not in use.

This is the most productive position for the Ergonomic Products Workstation.

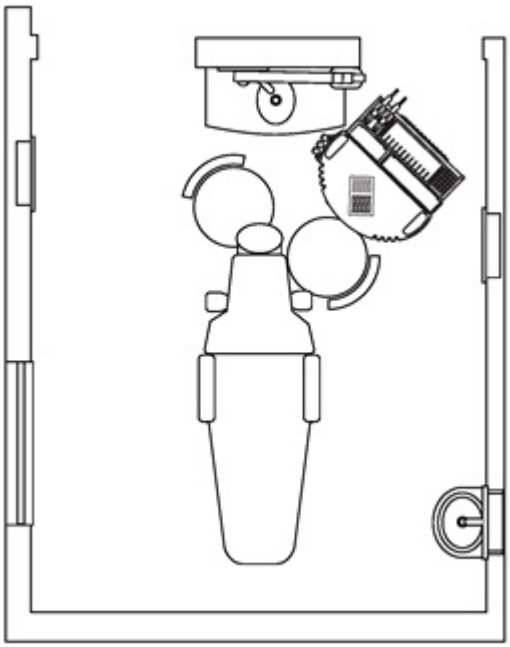

INCORRECT POSITIONING:

If individuals unfamiliar with the possibility of fingertip supplies push the delivery system back to a more familiar position, it will be less productive.

This placement prevents fingertip access, inhibits proper hose function, and markedly slows treatment progress.

If handpiece hoses appear to be shorter than needed for treatment, you will probably find that the Workstation is not ideally placed.

8 – USING YOUR WORKSTATION cont'd

WORKING 2- AND 4-HANDED:

The Workstation may be moved and positioned for a doctor or assistant working alone. Offices may choose to equip all rooms equally and, therefore, rooms used for hygiene maintain two-handed positioning as their basic configuration.

Traditional delivery systems may force solo operators to stand up and stretch for supplies. Two-hand can be accomplished by simply turning the Workstation to face the operator, while rotating the power channel back toward the patient's head.

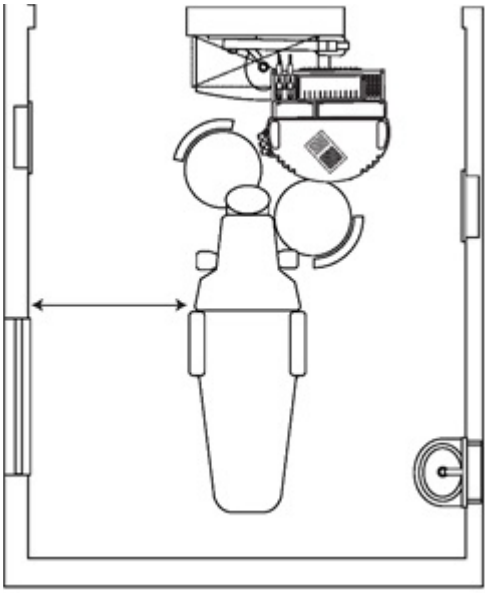

4-HANDED LAYOUT:

Workstation perpendicular to the long axis of the patient chair.

Assistant positioned with the ability to obtain all supplies without torso rotation.

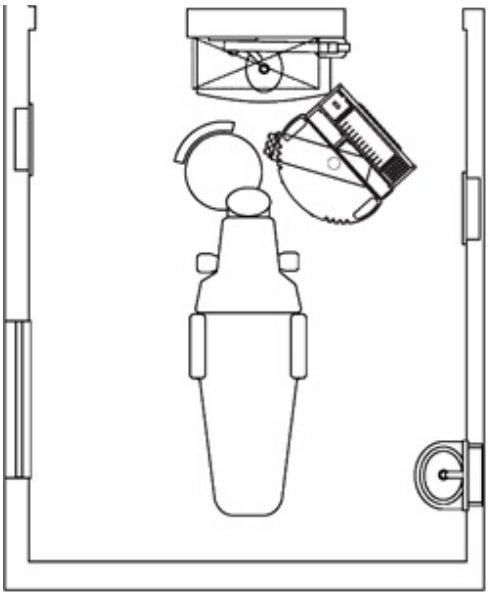

2-HANDED LAYOUT:

Reposition light curing unit closer to operator.

Rotate the work surface.

Swivel power channel into position.

8 – USING YOUR WORKSTATION cont'd

WORKING WITH AN ASSISTANT:

The Ergonomic Products Workstations can be successfully used in both two- and four-handed mode. In addition, delivery is possible with both seated and standing dental assistants. Its flexibility permits side-saddle, leg overlap, and European 3 and 9 o'clock seating as desired.

Offices in the U.S. that have been practicing with a side-saddle operating position do so simply because supplies have always been out of reach for the seated assistant. This is now changed with your new system that reduces wasted motion.

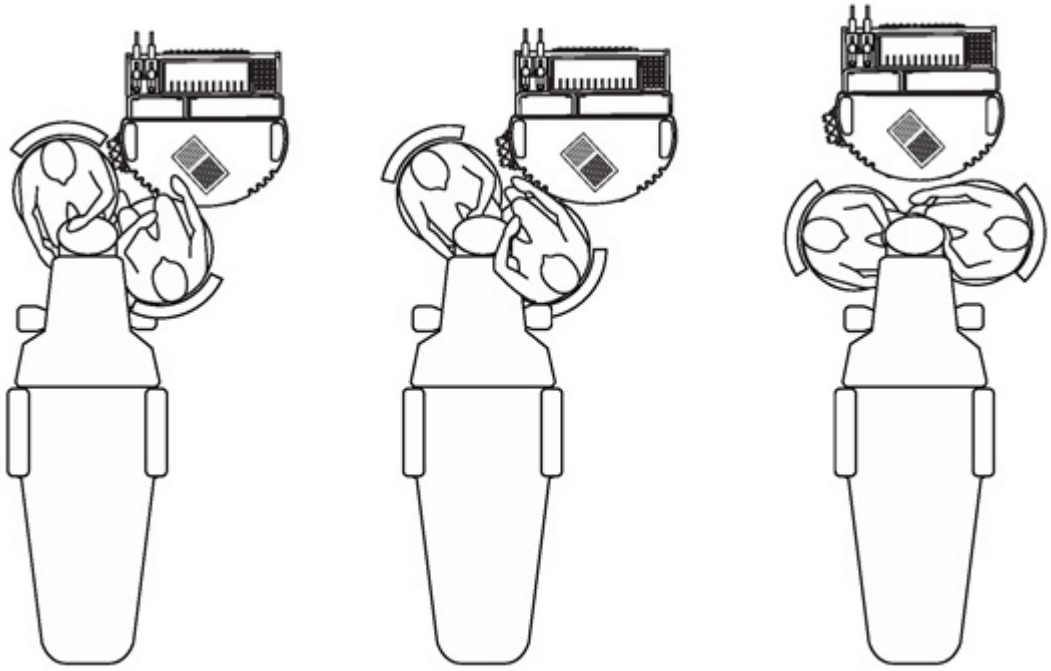

8 – USING YOUR WORKSTATION cont'd

SETUP AND RESTOCKING YOUR WORKSTATION:

Prior to introducing a patient to the treatment room for their appointment, instrument setups and all materials are placed into the treatment room. A standard recommendation for all multi-tier Workstations is to place a comprehensive supply tub on the second tier. Commonly, doctors choose from commercially available Zirc storage containers. Also available are the Ergonomic Products Zirc Plus and Ergonomic Products Mega-Tub sets, which increase storage capacity. Restocking items in this unit can now be accomplished by bringing the tub back to central resupply on a weekly basis for replenishment.

All impression guns can be placed on the gun rack of the Workstation in the order in which they will be used so that the doctor or assistant may easily obtain them. We suggest that you set up only those guns required for the planned procedure. Handpieces should be placed on their hoses, tested, and ready for use. Any bur blocks needed, can be placed in the recessed area of the Workstation closest to the doctor. All disposables suction tips, gauze squares, and bonding brushes should be set up at this time. Any case pans, lab slips, and alginate bowls can be placed behind the doctor on a secondary work surface.

Whether using an instrument cassette, tray setups, or loose instruments, these instruments are set out in the center of the lower work surface. When possible, use a cassette system.

TYPICAL RIGHT-HANDED DOCTOR SETUP:

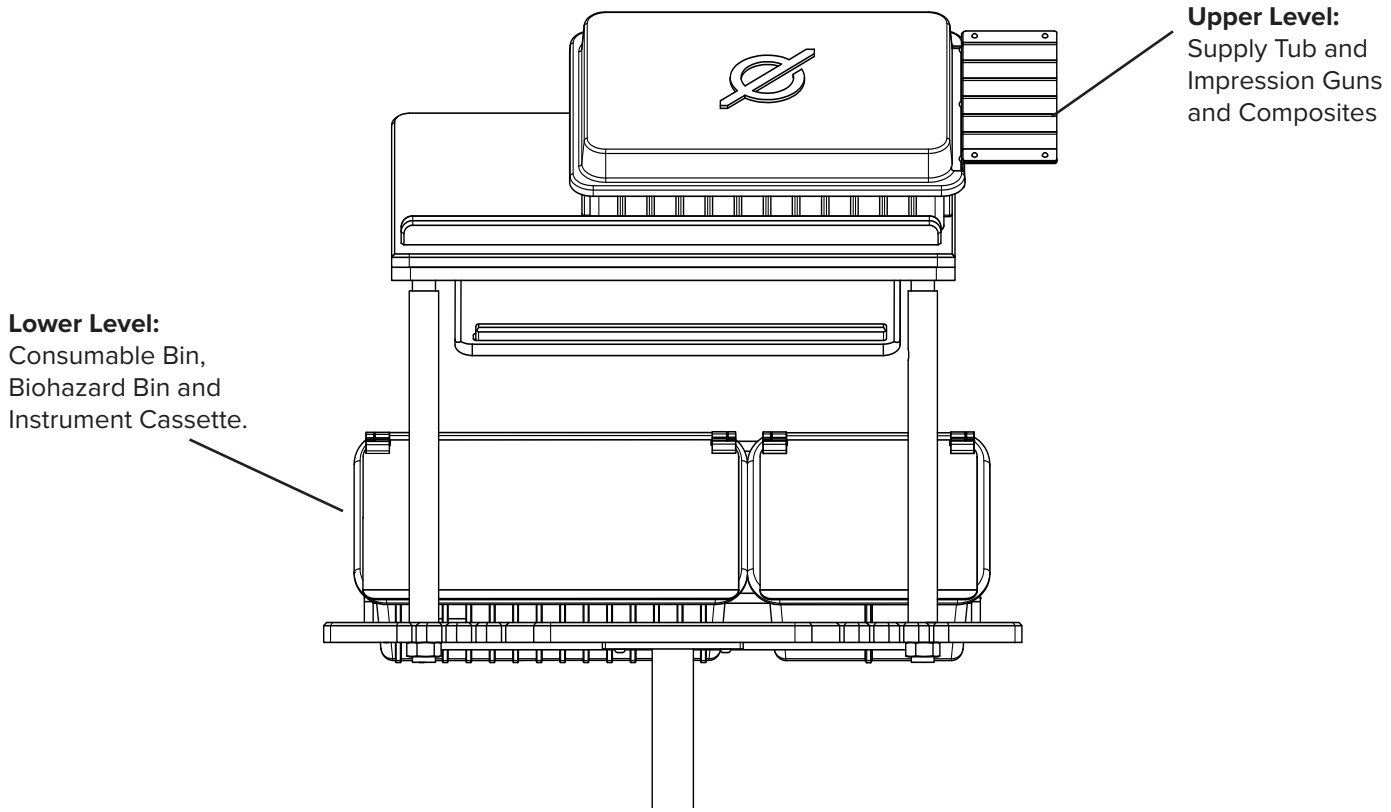

8 – USING YOUR WORKSTATION cont'd

SETUP AND RESTOCKING YOUR SUPPLY TUBS:

Tubs can be stocked with any materials for any clinical procedure. The tubs serve to keep materials organized and are easy to visually inventory. This minimizes problems with missing supplies during the middle of procedure appointments. Your tub will hold 90% of your expensive materials (non-consumables). Tubs make drawers unnecessary, eliminating the search for missing material. The tubs allow you to have your inventory in a central place in the room, so your assistant can easily see when material inventory is getting low. You will be able to stock what you need for a week or two.

The basic materials to place directly into the tubs are, for example, composite capsule tips, crown cement powder and liquid, temporary cements, matrix bands, retraction cord and astringent. Bonding systems should also be stored in the tub. Other materials can be placed in small clear containers with lids, such as those that your lab uses for crowns and bridges. We find that this works well with polishing discs and with articulating paper that is pre-cut. Primers, adhesives and catalysts all fit nicely into the dividers of the tub when removed from their original packaging. Disposable mixing wells should also be housed in the tubs. Size Two duplicate films also fit neatly into the tub and can be used for most of all unscheduled intraoral procedure x-rays. Bulk film sets for full x-ray series are transported with procedure setups.

The Workstation tub can be custom-fit for any doctor's or assistant's needs. The tub should be used so that the assistant and doctor have everything they need for composite procedures, amalgam (if utilized), any cementing procedures, and also all of the small materials needed for a crown or bridge preparation. This prevents the assistant from having to leave the room during a procedure. All materials can be set aside on the secondary deployment tray and wiped down with a disinfecting cloth prior to being reset into the tub at the end of a procedure.

Using the tub also makes restocking of supplies much easier. The assistant can take the tub into the central resupply area where all excess materials are kept. The tub can then be surveyed, easily restocked, and returned to the treatment room quickly.

8 – USING YOUR WORKSTATION cont'd

OFFICE WORKFLOW—ROOM CONSOLIDATION:

Dental treatment Workstations can make it unnecessary to use dental support cabinetry. Rooms that are purpose-built for Ergonomic Products, Inc. Workstations can be much narrower than is typical. No external side cabinetry is necessary because all of your required (active) storage is at your fingertips.

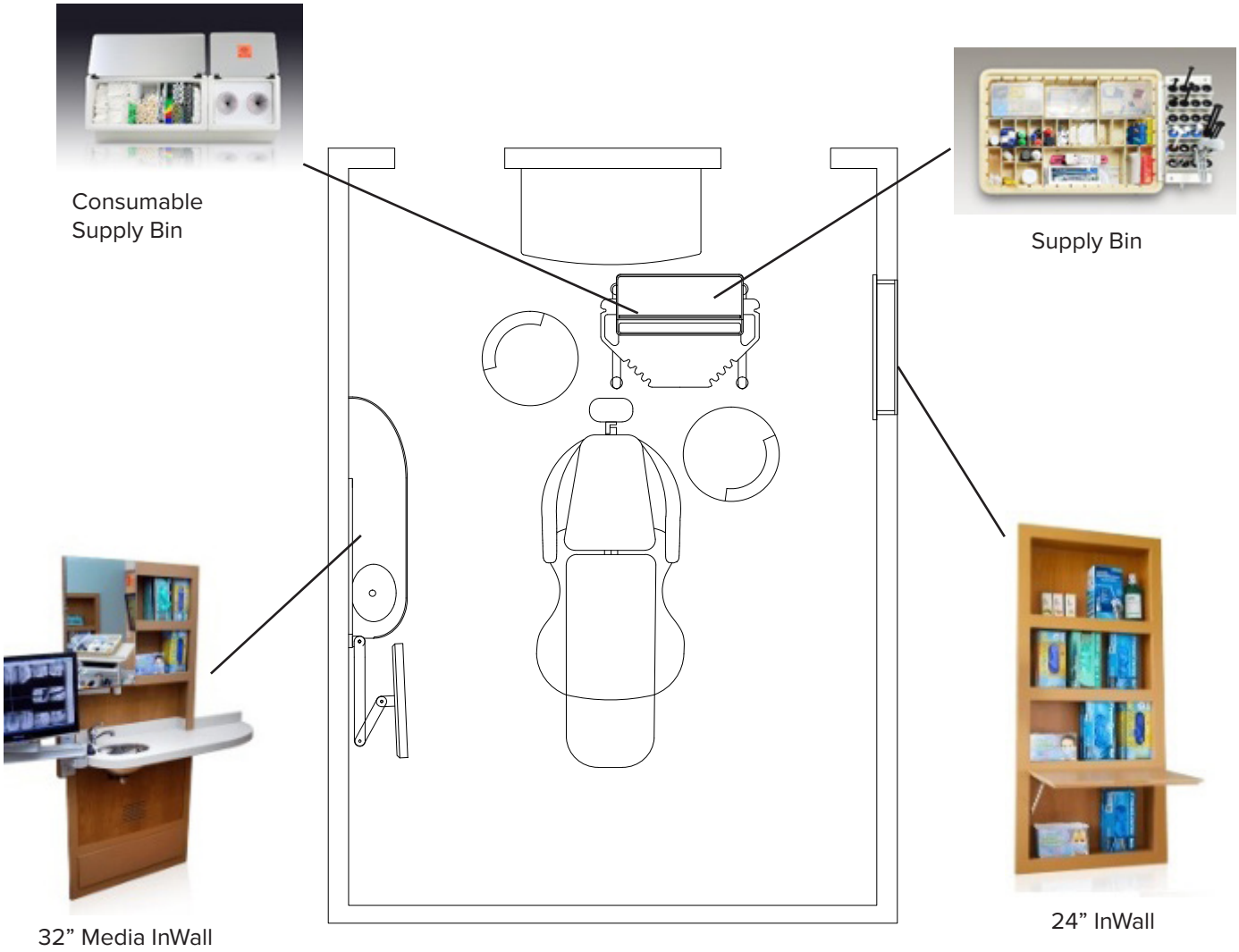

8 – USING YOUR WORKSTATION cont'd

USING YOUR KEYBOARD SLIDE:

To use your Keyboard Slide simply pull the keyboard towards you untill it stops (Fig 8.1). To return the Keyboard Slide into place, push the keyboard back until it locks in place (fig 8.2).

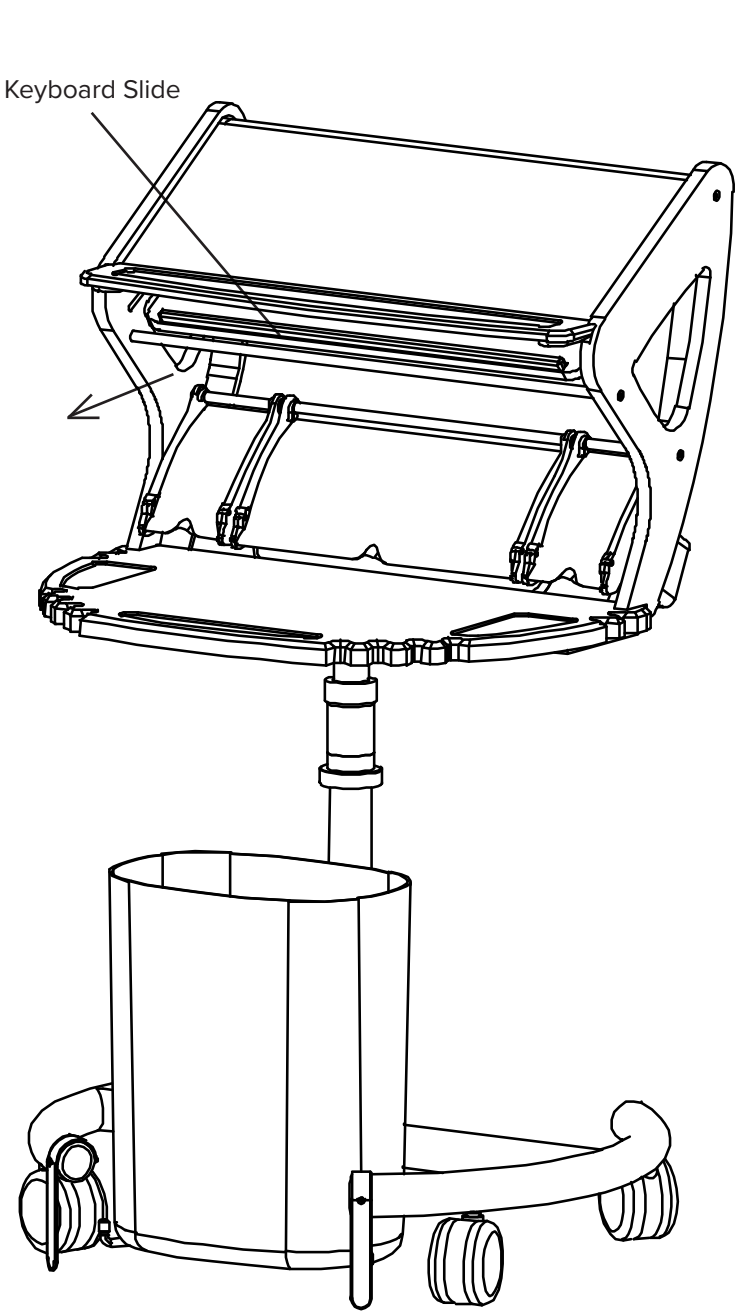

Fig 8.1

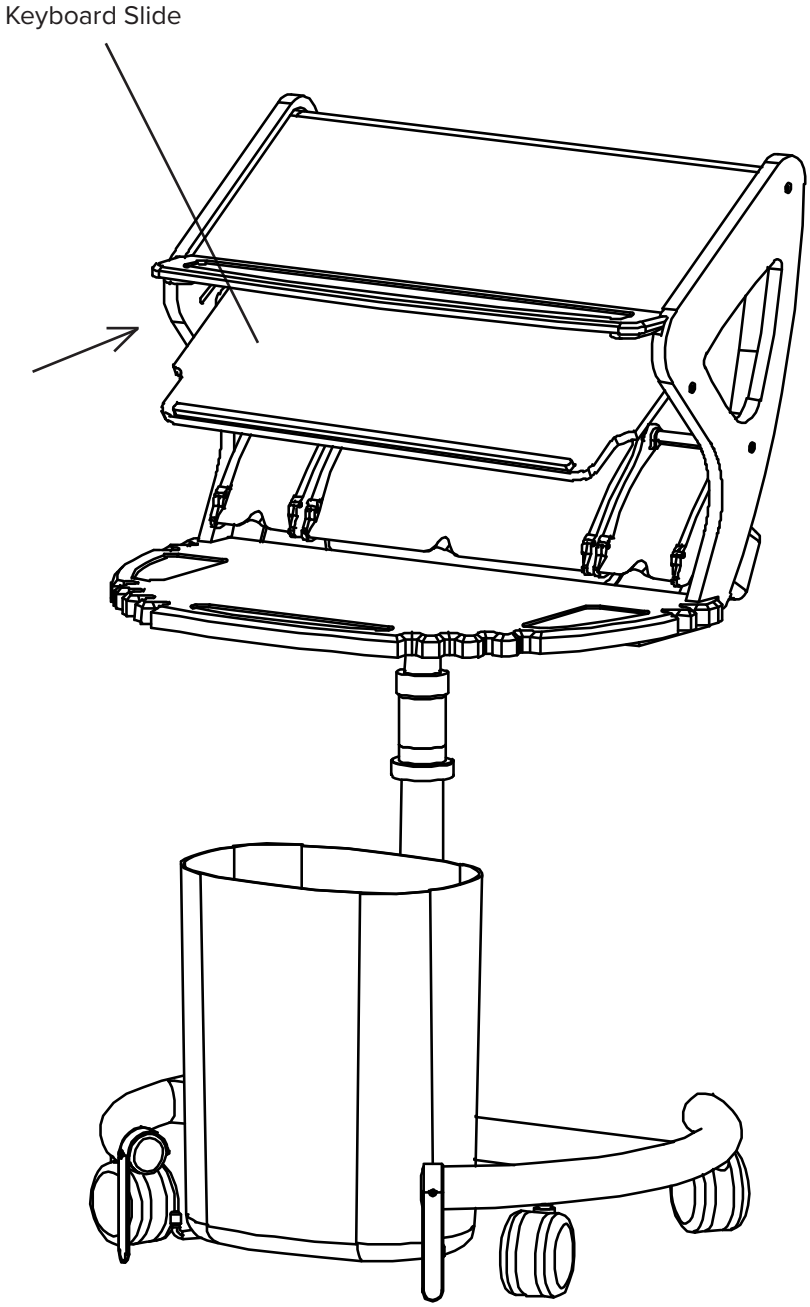

Fig 8.2

9 – REQUIRED TOOLS / UNPACKING AND INSPECTING

REQUIRED TOOLS:

Utility Knife
5/32” & 3/16” Allen Wrench
Adjustable Wrench

1. Inspect shipping container (Fig 9.1) for visible damage upon arrival. If transit damage is found, contact Ergonomic Products immediately (this will expedite the corrective process).

2. Use safe lifting procedures to free the product from the container, and remove all packing material and accessory boxes from shipping container (Fig 9.2).

3. Lay individual components on clean surface to avoid scratching, and inspect contents. If damage is found, contact Ergonomic Products immediately.

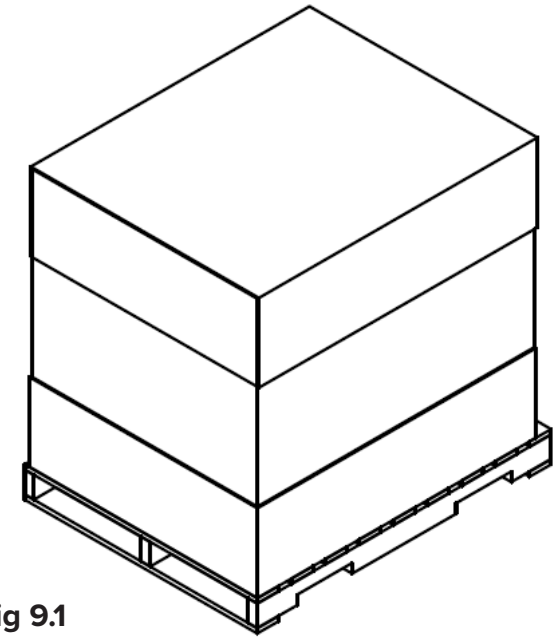

Fig 9.1

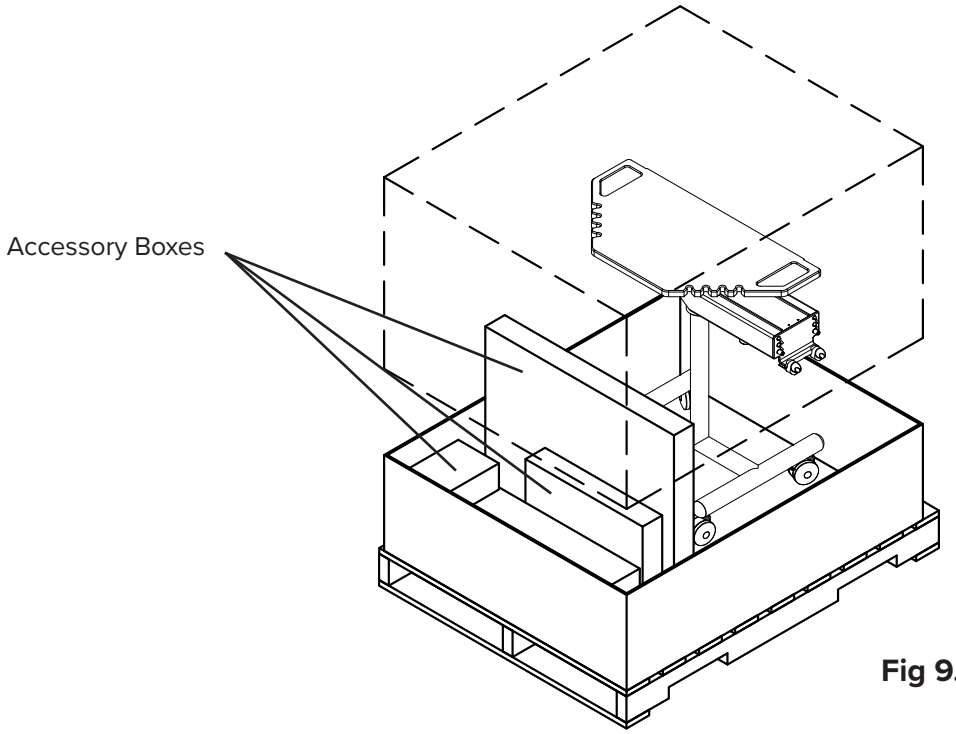

Fig 9.2

10 – STANDARD PARTS LIST

Check that the configuration/options for your product(s) are correct. If anything is damaged or missing, please contact Ergonomic Products customer service at 1-866-ERGO-4-US.

1. Hose Connection Hardware Kit:

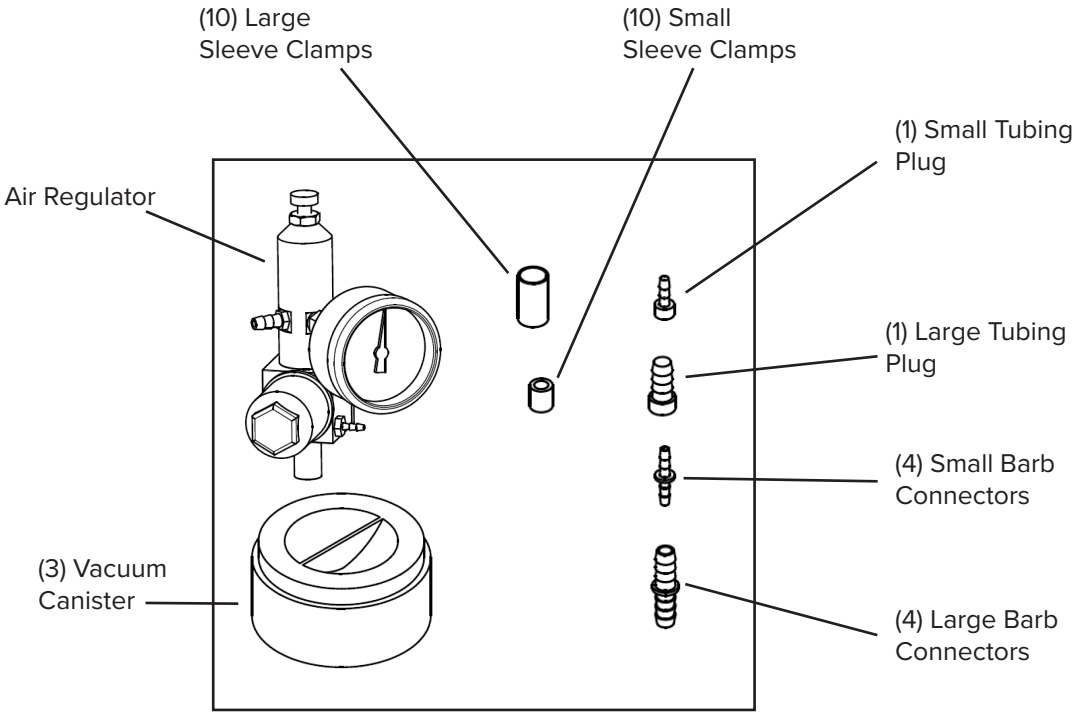

**City water Kit will include:
(1) Water Regulator
(1) Orange Tube
(1) Small Tee Barb

2. Standard Foot Pedal

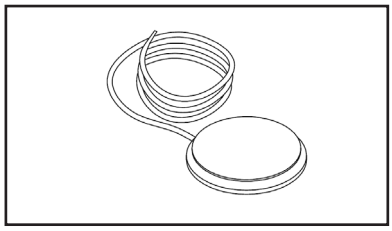

4. (1) Resupply Bin

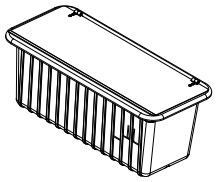

3. (1) Ultra Tub Bin

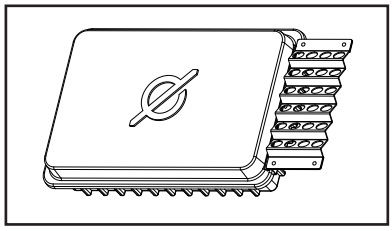

5. (1) Medical Waste Bin

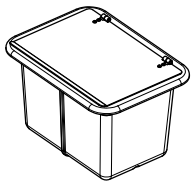

11 – WORKSTATION ASSEMBLY

STEP 1: SECURE BIN FRAME TO WORKSTATION BASE

1. The Ultra Bin is placed on the top level angled work surface. (Fig 11.1).

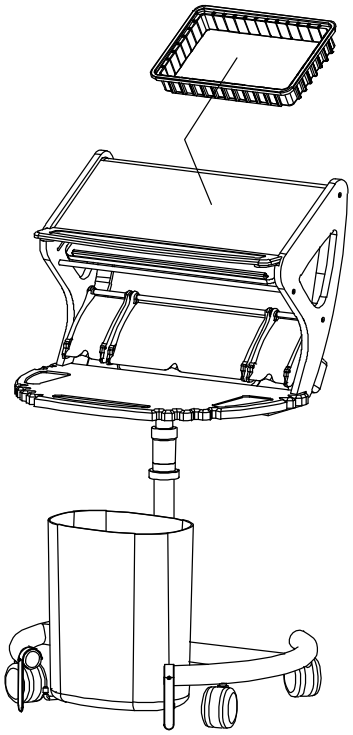

Fig 11.1

STEP 2: INSERT BINS INTO PLACE

1. Slide your Resupply Bin between the med waste holders. Slide the Med Waste Bins into the med waste holder slot (Fig 11.2).

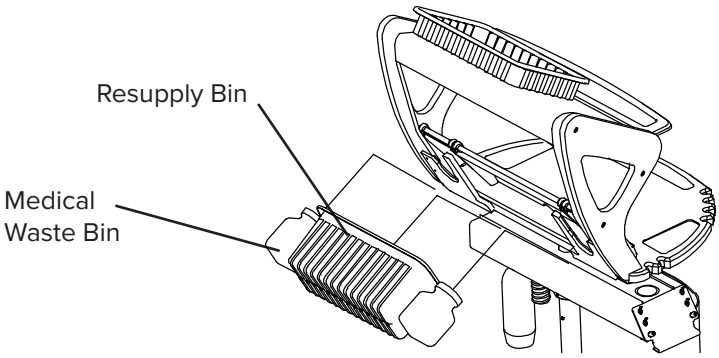

Fig 11.2

11 – WORKSTATION ASSEMBLY cont'd

STEP 3: HOSES AND HANDPIECES

1. Attach hoses to channel and handpieces to Worksurface (Fig 11.3)

Fig 11.3

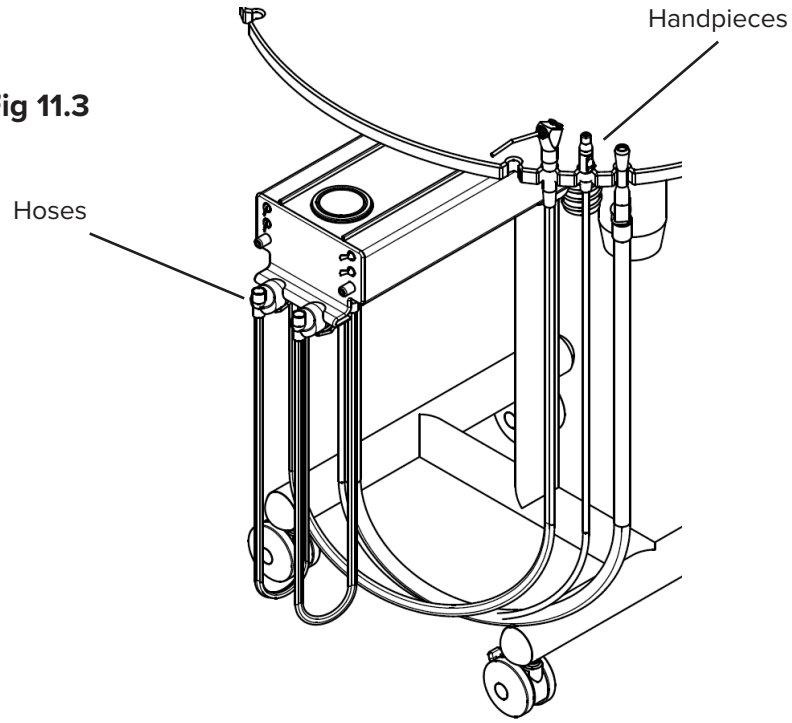

STEP 4: IDENTIFY YOUR FOOT PEDAL CONNECTIONS

1. Refer to Fig 12.4 to review your foot pedal type.

Fig 12.4

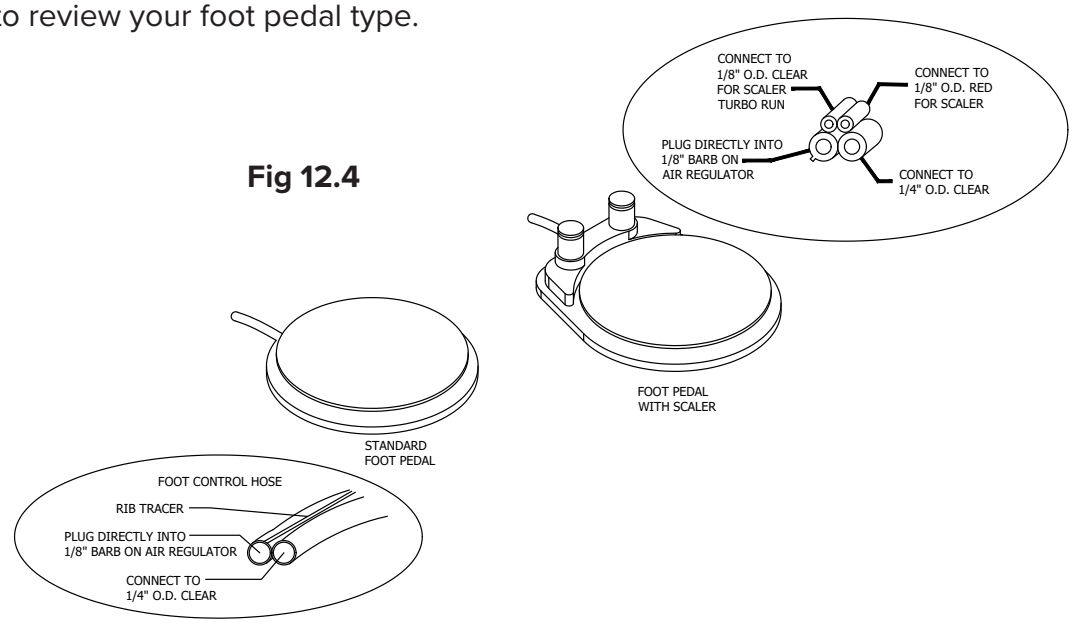

12 – UMBILICAL INSTALLATION

STEP 1: IDENTIFY YOUR UMBILICAL CONNECTION

Note: The following figures will help determine which connection steps to take on installing your Umbilical Tubing.

1. In Fig 12.1 the Tubing and Wiring from the Umbilical is shown as loose ends and the connections need to be done manually by your installer or a licensed contractor. Please follow the directions on page 28.

2. In Fig 12.2 the Tubing from the Umbilical is shown with a quick connect plug. Please follow the directions below

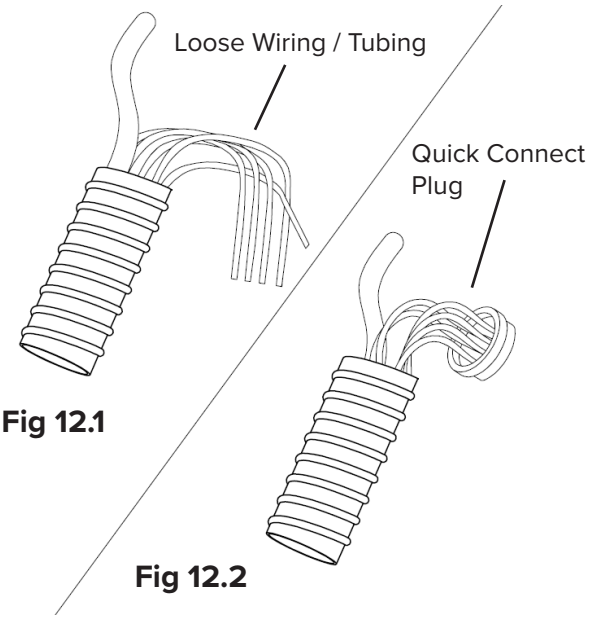

Fig 12.1

Fig 12.2

STEP 2: REMOVE THE UTILITY COVER

1. Remove the Utility Cover (Fig 12.3) to get access to the Hose Clamp that is attached to the back of the Workcenter front panel.

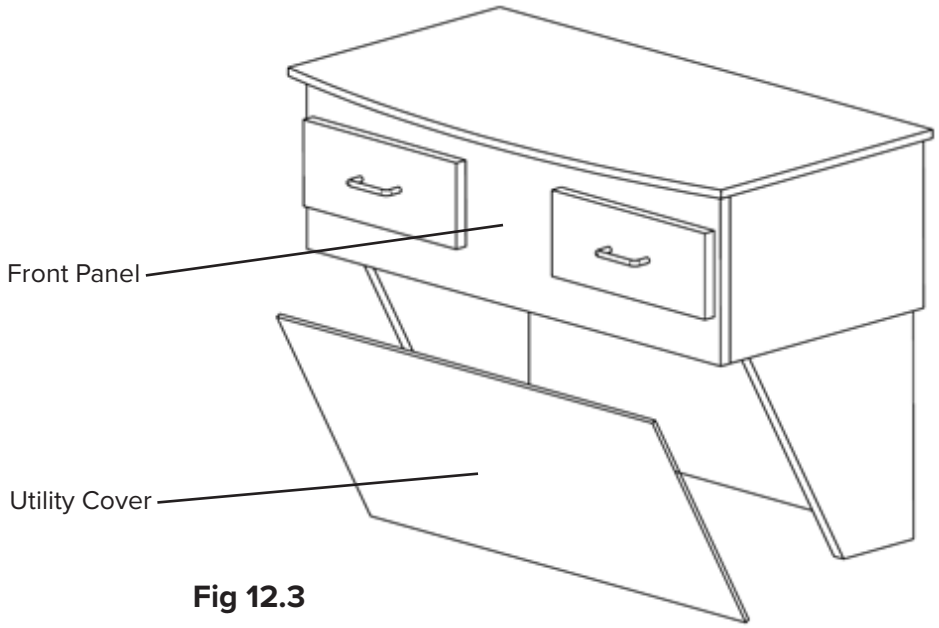

Fig 12.3

12 – UMBILICAL INSTALLATION cont'd

STEP 3: SECURE THE UMBILICAL TUBE

1. Inset Umbilical through Hose Clamp opening (Fig 12.4).

2. Once the Umbilical is held in place (Fig 12.5) tighten the locking screw on the Hose Clamp to secure the Umbilical (Fig 12.6).

3. Once the Umbilical is secured, replace the Utility Panel when connections are complete.

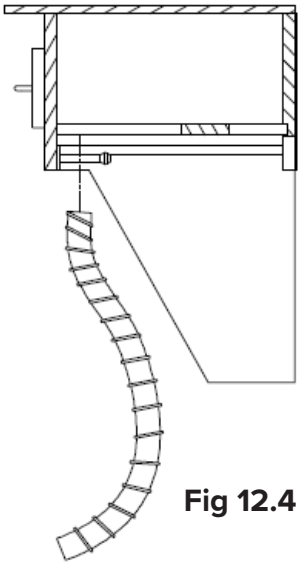

Fig 12.4

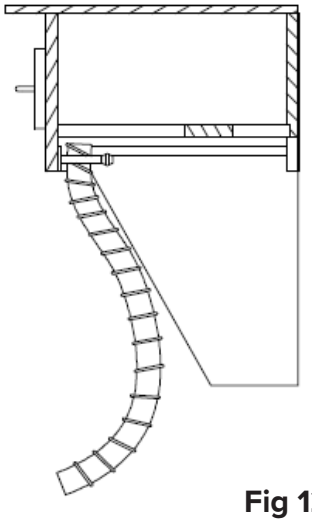

Fig 12.5

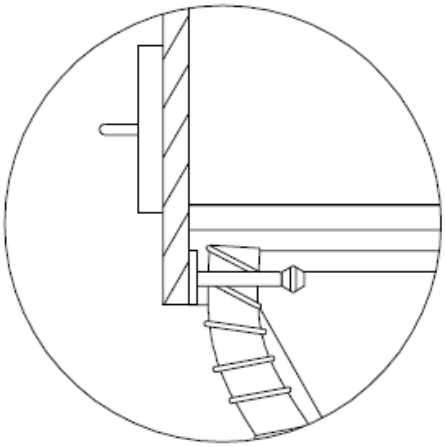

Fig 12.6

STEP 4: WIRING AND TUBING CONNECTIONS

1. To make your wiring and tubing connections you will need to remove the Utility panel. Please see page 25, step 2 to review removal of the panel.

2. Please be sure to have your licensed contractor or installer follow Fig 12.7 for proper tubing and wiring connections. Wiring and tubing may differ depending on options purchased. Configuration shown is with standard options.

(This schematic can be found on pg 37, and also on the back of the access panel.)

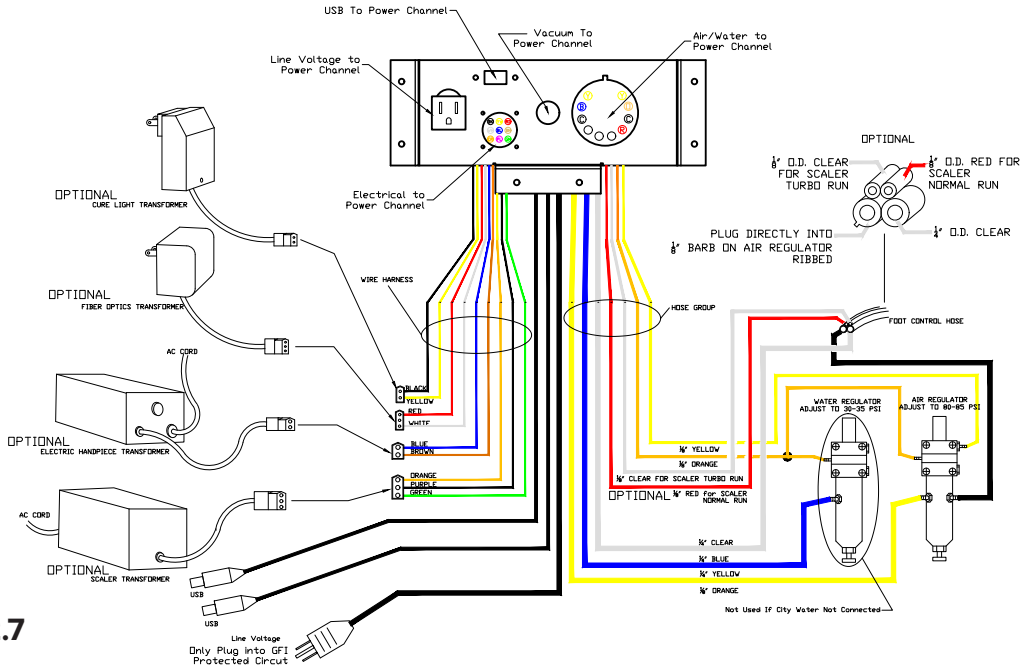

Fig 12.7

13 – UMBILICAL CONNECTIONS

STEP 5: MAKING THE UMBILICAL CONNECTIONS

1. All of the utilities required by your Workstation are supplied via the Umbilical Tube. Installation simply involves plugging in tubing and electrical connectors.

2. Refer to Fig 13.1 to become familiar with the tubing and electrical connections (some options shown may not be identical to the configuration of your Workstation).

3. **Be careful not to cut or damage any of the tubes and wires inside the umbilical tube.**

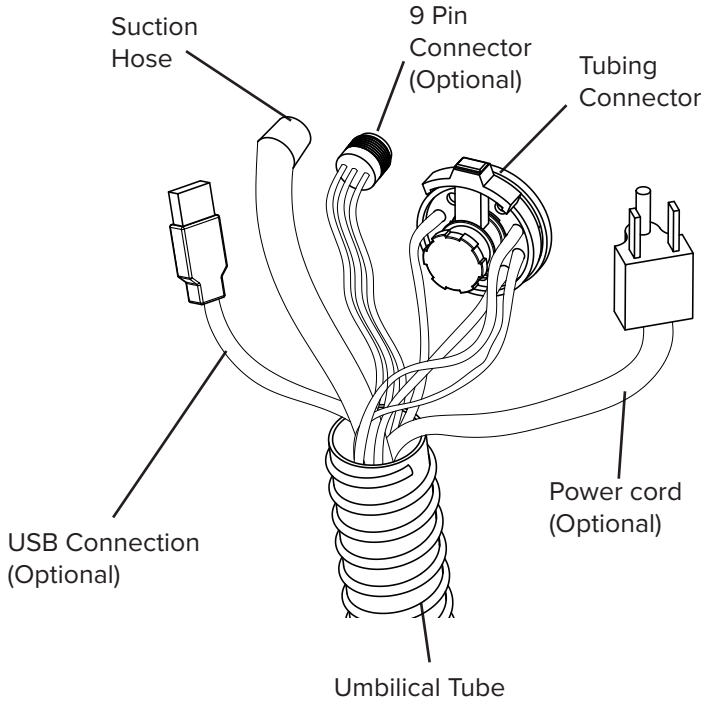

Fig 13.1

STEP 6: CONNECTING THE 9 PIN AND TUBING CONNECTORS

1. Plug in 9 Pin Power Connector and Tubing Connector as shown in Fig 13.2.

2. For proper orientation, the 9-Pin Power Connector wires black, yellow, and red should be on top.

3. To plug in and secure the Tubing Connector move lever clockwise to install or remove. Move counterclockwise to lock in place.

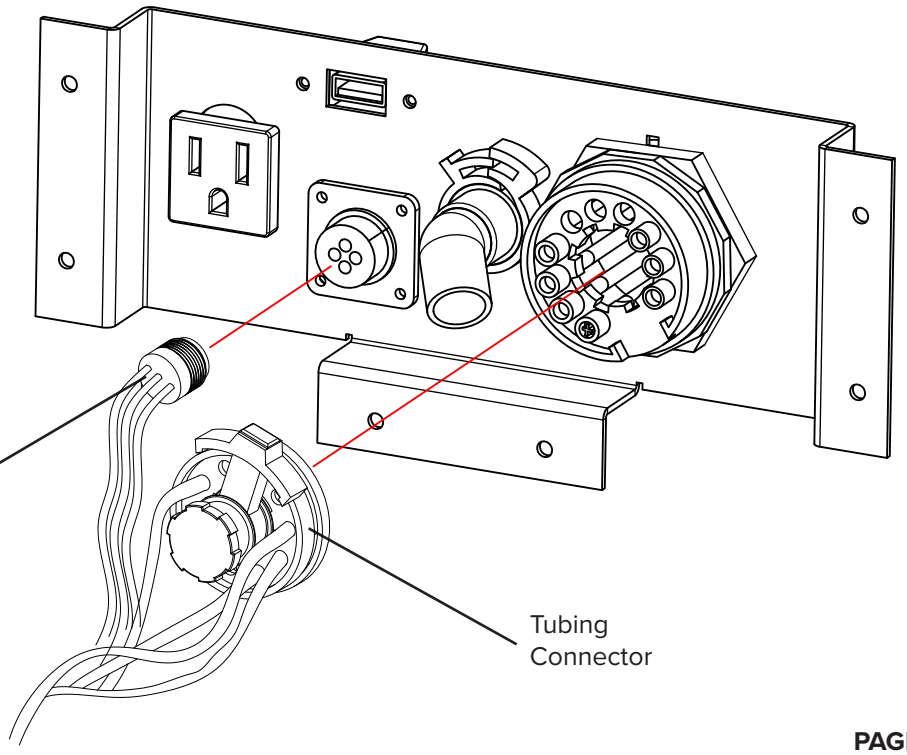

Fig 13.2

13 – UMBILICAL CONNECTIONS cont'd

STEP 7: CONNECTING THE USB, POWER, AND SUCTION HOSE

1. Refer to Fig 13.3 for connections

2. Plug suction hose onto copper tube.

3. Run USB cord through hole and make appropriate connections.

4. Run Power cord through hole and make appropriate connections.

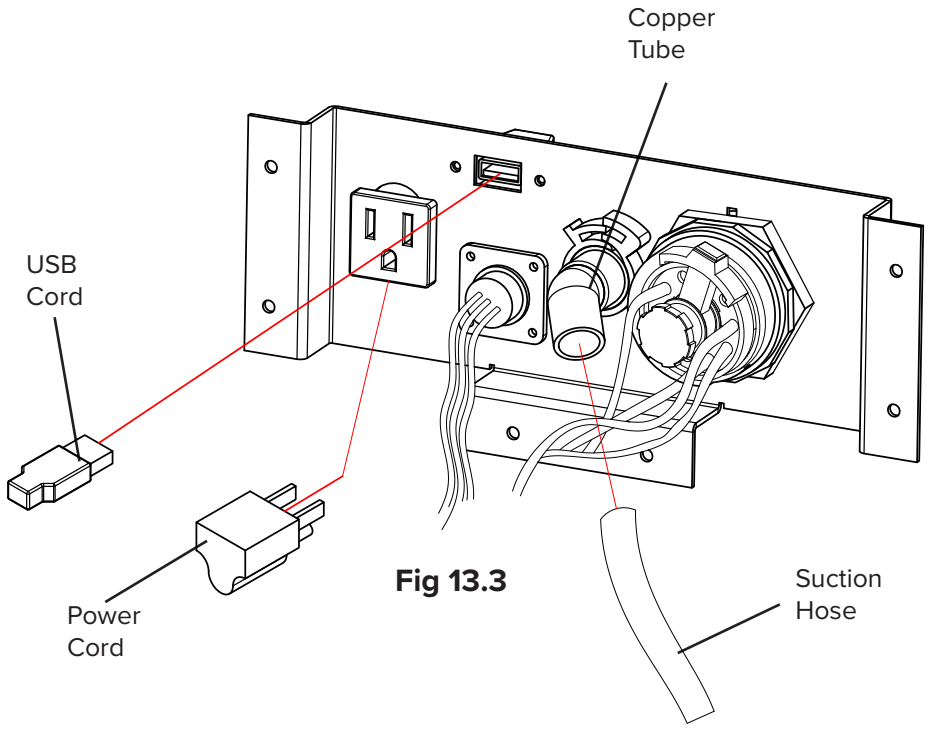

Fig 13.3

STEP 1: PREPARING THE BLOCKING FOR SNOOT CONNECTION (OPTIONAL)

1. Refer to Fig 13.4 for blocking location

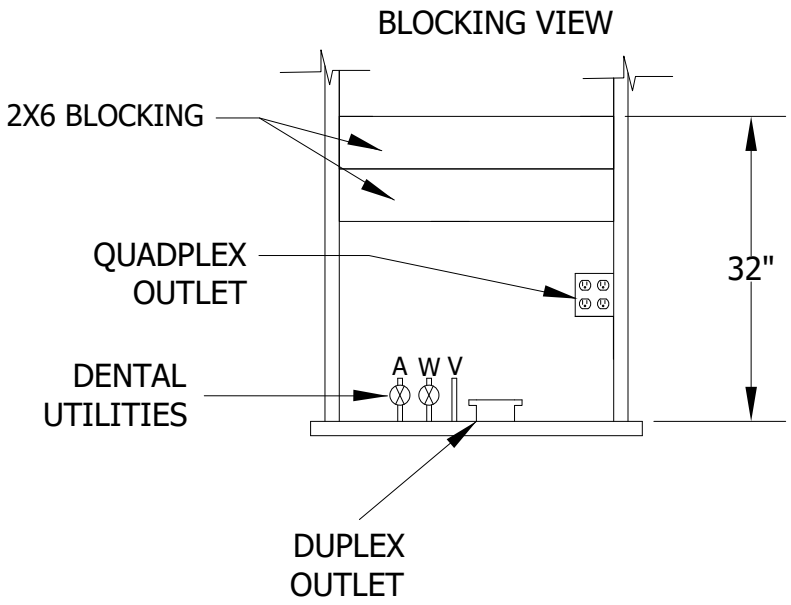

Fig 13.4

13 - UMBILICAL CONNECTIONS cont'd

STEP 2: PREPARING THE SHEET ROCK FOR SNOOT CONNECTION (OPTIONAL)

1. Refer to Fig 13.5 for location of 2" hole for the snoot.

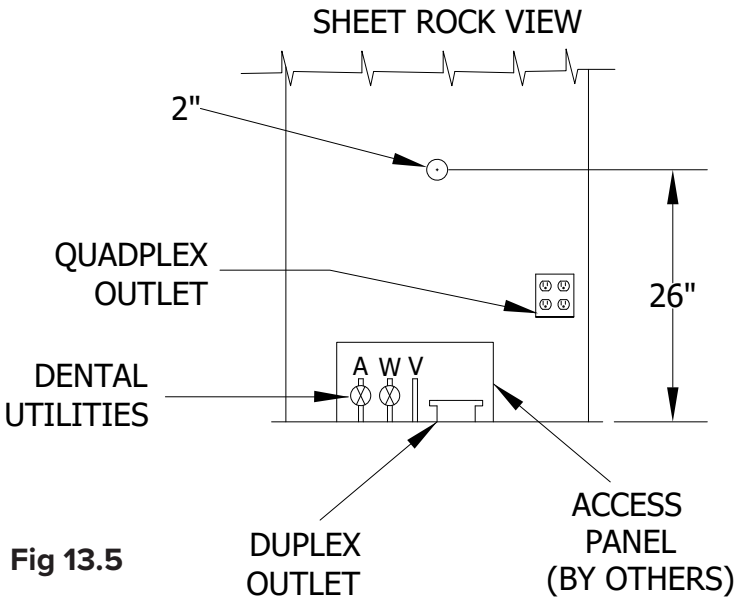

Fig 13.5

STEP 3: SECURING THE SNOOT

1. Refer to Fig 13.6 for final view of the snoot connection

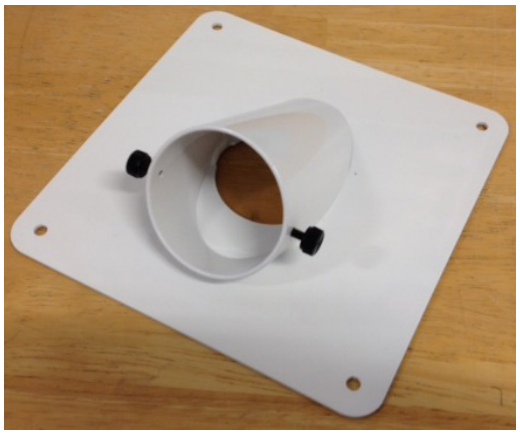

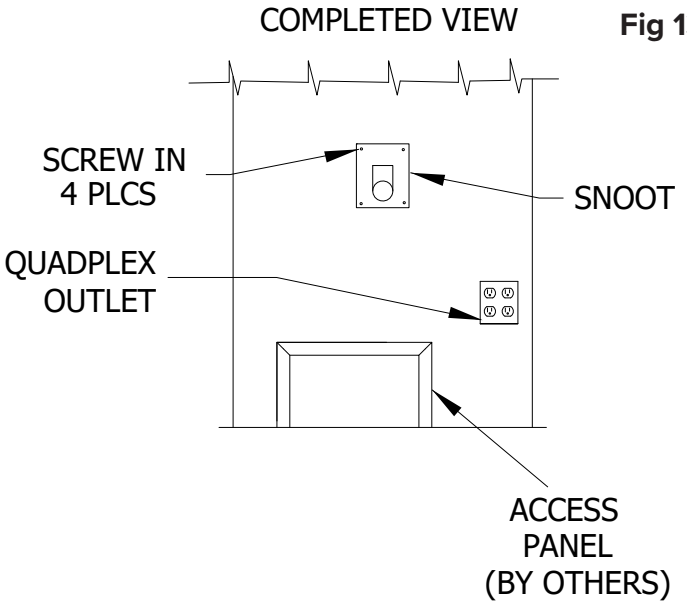

Fig 13.6

13 - UMBILICAL CONNECTIONS cont'd

STEP 4: SECURING THE UMBILLICAL TO THE SNOOT AND FINAL CONNECTIONS

1. Refer to Fig 13.7 for final connections for the umbillical and tubings. Secure the umbillical to the snoot by tighting the two thumb screws on the snoot.

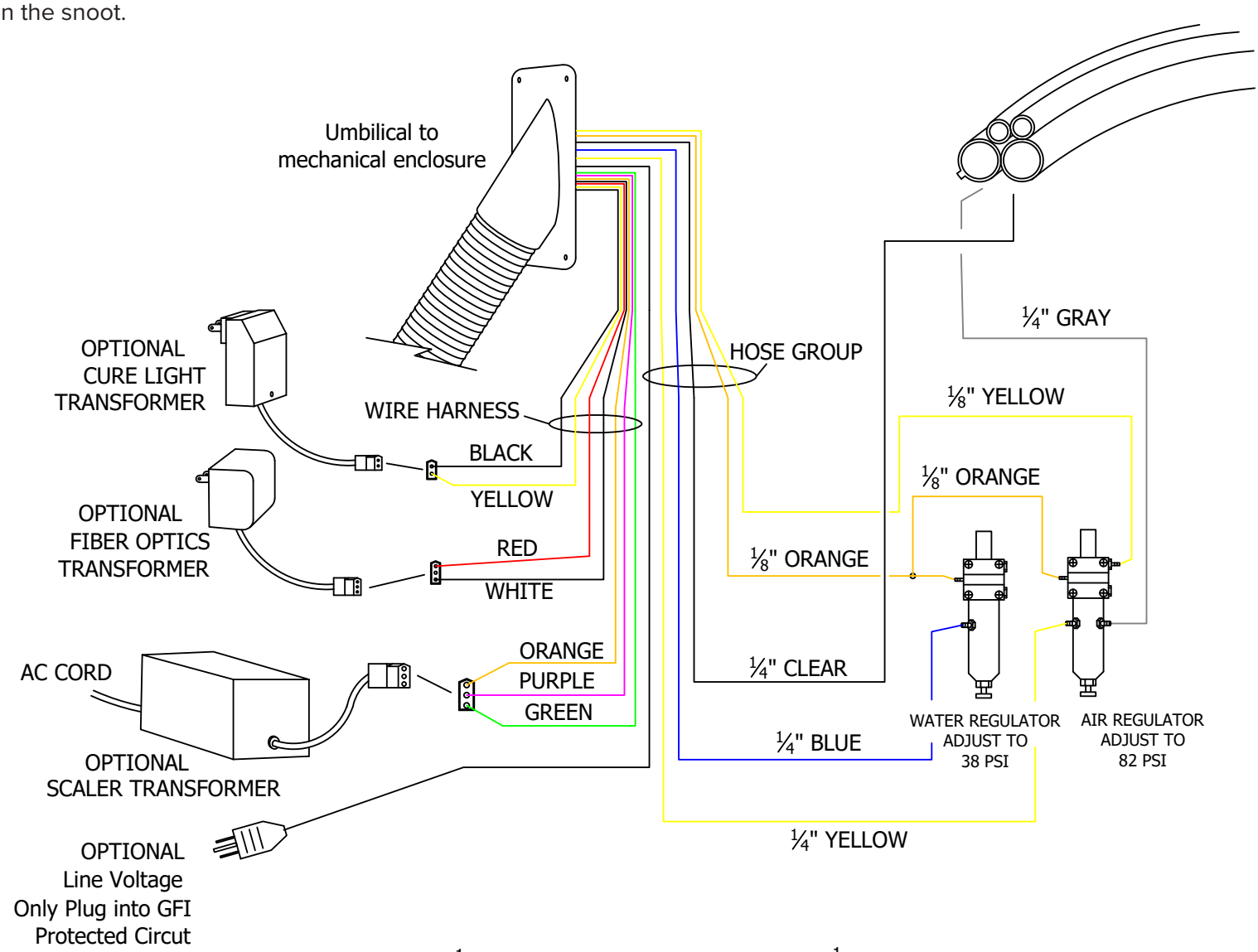

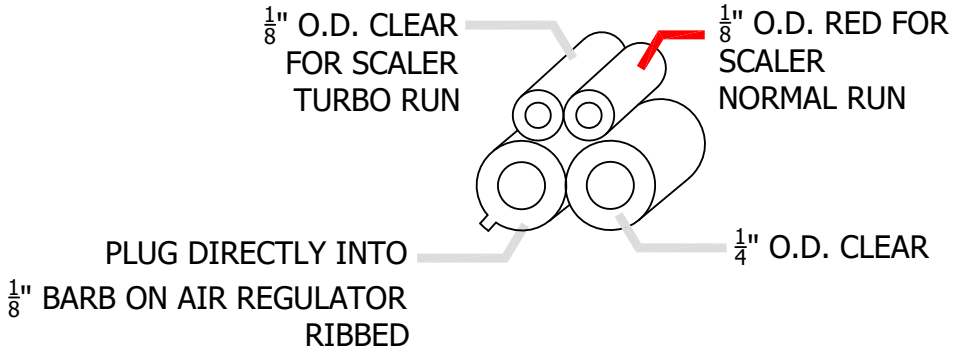

14 – WORKSURFACE HEIGHT ADJUSTMENT

STEP 1: LOOSEN SET SCREW AND ADJUST TO DESIRED HEIGHT

1. Loosen the Height Adjust Set Screw (use 3/16” Allen wrench) on the Workstation Support Post Coupler (Fig 14.1)

2. Raise or lower the worksurface (in 1-inch increments).

3. Tighten the set screw to the desired height.

Fig 14.1

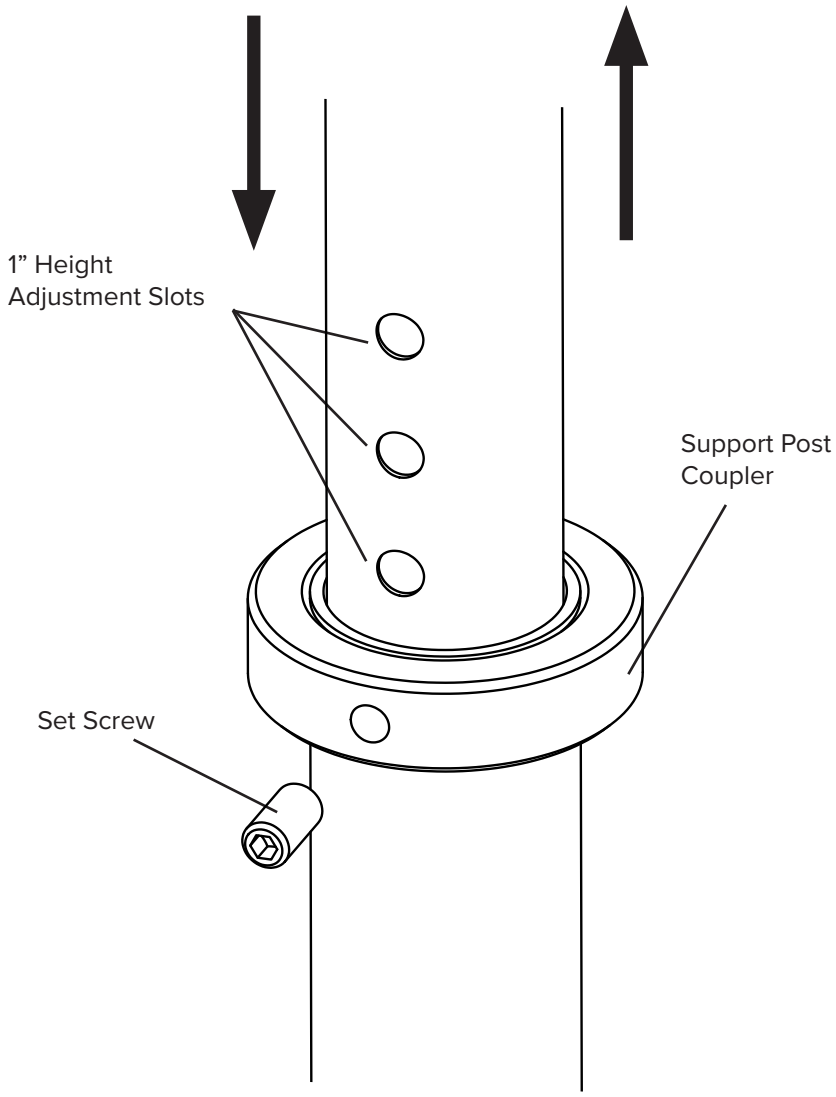

15 – TROUBLESHOOTING

PROBLEM:	POSSIBLE ISSUE AND SOLUTION:
No air to workstation	Air compressor is off Air supply valve is off Air regulator not adjusted properly. Adjust to 80-85 PSI Master switch is off or not supplying air to master regulators
No bottle water supply	Master switch is off Bottle is empty Bottle/Line switch is on Line (if applicable) Bottle pressure switch is off (if applicable)
No or low drive air for handpieces	Check if air pressure supplied to Workstation at 80+ PSI Adjusting screws on bottom of power channel not adjusted properly
No water for handpieces	Check both line water supply with syringe Wet/dry switch on face plate or foot pedal not switched on Flow control for handpieces not adjusted
No air / water at syringe	Check air supply, line water supply, bottle water supply
Workstation does not turn on	Verify that the workstation is properly connected to a working air source
No line water supply (optional)	Dental water supply switch (on Workstation) or water valve shut off at regulator Water regulator not adjusted Master switch is off or not supplying air to master regulators

For support call Ergonomic Products directly at 1-866-ERGO-4-US

16 – MAINTENANCE

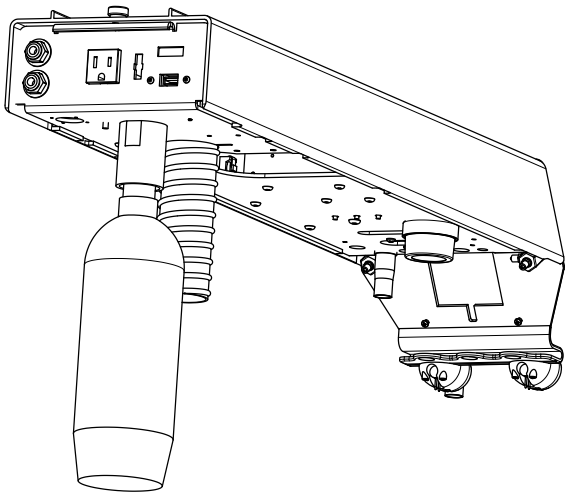

WATERLINE DISINFECTION RECOMMENDATIONS:

The bottle mounted under the rear of the power channel is a .75L (750ml) or 2L (2000ml) bottle water bottle.

Its use is selected via the “Bottle” position on the Bottle/Off switch mounted on the power channel face. The “Off” position on the Bottle/Off switch relieves bottle pressure for bottle service and selects water from your piped water supply (if this option is purchased).

The correct water to use in the Ergonomic Products Workstation equipped with self-contained water depends on the quality of your municipal water.

Tap Water – If you have confidence in the quality of your municipal water supply, consider using tap water in your self contained water bottle.

Softened Water – For water hardness that is greater than 200mg/L, Ergonomic Products recommends use of a water softener to prevent build up of mineral deposits that may impact Workstation performance. Water pH should be compliant with local drinking water regulations.

Ergonomic Products does not recommend the use of distilled or reverse osmosis water in self-contained dental units.

It is important to regularly monitor the water in your dental equipment. The frequency depends on your test results and water quality goals. Although the ADA has established a target of less than 200 colony forming units per milliliter (cfu/ml) of heterotrophic, mesophilic organisms, acceptable water quality, according to The Center’s For Disease Control (CDC), suggest less than 500CFU/mL. https://www.cdc.gov/oralhealth/infectioncontrol/faqs/dental-unit-water-quality.html

16 – MAINTENANCE cont'd

SHOCKING THE WATERLINES:

Shocking your dental unit waterlines is required for every water treatment protocol followed up with a daily or continuous maintenance.

WHEN YOU SHOULD SHOCK THE WATERLINES:

- Before using your EP Workstation for the first time, shock your dental unit waterlines.
- At least every quarter (There are yearly continuous products, please refer to manufacturer)
- When your waterline test results reveal contamination of 500CFU/mL
- Any time you change your daily waterline maintenance protocol

DAILY MAINTENANCE:

- Fill water bottles with use of daily and a water treatment (For example; BluTab; EPA registration #84020-1).
- Flush waterlines at the beginning of the day for 30 seconds
- Flush waterlines for 30 seconds between patients
- Empty water bottles nightly

It is important to test the water in your self-contained dental unit once per month. If monthly results meet water quality requirements for all treatment rooms for three consecutive months, reduce testing to once every three months. Check with your dental supplier or local municipality for testing kits.

TREATMENT DURING PERIODS OF INACTIVITY:

Shut down:

1. Remove and empty water bottle
2. Purge water from all waterlines including handpieces, ultrasonic scalers, and A/W Syringe.
3. Place empty water bottle back on unit.

Start up:

1. Shock dental unit
2. Test waterlines
3. Resume daily maintenance and fill water bottle.

Caution: Ergonomic Products self-contained water systems are not designed to deliver sterile solution. A separate means for administering sterile coolant and irrigant is required if you use the Ergonomic Products Workstations for surgical procedures.

Caution: Do not use saline solutions, mouth rinses or any chemical solutions not specified in this guide in your Ergonomic Products self-contained water system. These may damage the system components and cause equipment failure.

Check water lines periodically for deterioration and replace if necessary prior to patient use. If water line tubing needs to be replaced, please contact Ergonomic Products.

Ergonomic Products does not assume responsibility for your waterline treatment decisions. Always choose a waterline maintenance protocol that fits your practice needs and in your practice budget. All microbials used for dental waterline maintenance must be registered with the EPA. NOTE: Depending on the cleaning/shock product used, you may need up to 3 days to complete the cleaning/shocking protocol. Always follow manufacturer instructions for cleaning/shocking procedures.

16 – MAINTENANCE cont'd

SYSTEM DESCRIPTION:

CAUTION: *Always wear gloves when servicing dental workstations.*

Your workstation is equipped with a 5/8" main vacuum tube connecting to a 3-port vacuum canister (2 HVE and 1 Saliva Ejector). Units come standard with one saliva ejector valve and one HVE valve. Both valves are a quick-disconnect and autoclavable type. Tips for both valves are industry standard and you can order these from your dental equipment supplier.

SYSTEM MAINTENANCE:

VACUUM CANISTER:

Check the vacuum canister and screen (part #409-155) weekly. Replace them as soon as lower-than-normal vacuum is detected. To facilitate cap removal, turn off the vacuum pump before servicing. Call Ergonomic Products, Inc. at 1-800-ERGO-4-US to order new components.

VALVES:

Valves can be autoclaved after each use or wiped down using any of the commercially available disinfecting wipes. Daily, draw clean water through the valves while working the valve handle to help prevent the buildup of debris. Brush the internal bore once a week with a stiff brush of proper size. Disassemble valves periodically (2-3 months) to clean internal parts and lubricate the O-rings.

MUFFLER AND OIL COLLECTOR MAINTENANCE:

A combination muffler and oil collector quiets the spent drive and traps excess handpiece lubrication. Unscrew the lower portion of the canister to access the piece of gauze that acts as an absorbing pad. Check the gauze every couple of weeks and replace it as necessary.

16 – MAINTENANCE cont'd

CLEANING AND DISINFECTING DENTAL UNITS AND ENVIRONMENTAL SURFACES:

GENERAL GUIDELINES:

After treatment of each patient and at the completion of daily work activities, countertops and dental unit surfaces that might have been contaminated with patient material or when the surface is contaminated with biological material must be cleaned with disposable toweling (for example PDI Super Sani Cloth) and water as necessary. Then disinfect surfaces with a suitable chemical germicide (for example DisCide Ultra Disinfectant Spray).

The CDC recommends using a chemical germicide registered with the EPA as a "hospital disinfectant" and labeled for "tuberculocidal" (i.e., mycobactericidal) activity to disinfect surfaces that have been soiled with patient material. These intermediate-level disinfectants include phenolics, iodophors, and chlorine-containing compounds. Because mycobacteria are among the most resistant groups of microorganisms, germicides effective against mycobacteria should be effective against many other bacterial and viral pathogens.

Low-level disinfectants—EPA-registered "hospital disinfectants" that are not labeled for "tuberculocidal" activity (e.g., quaternary ammonium compounds)—are appropriate for general housekeeping purposes such as cleaning floors, walls, and other housekeeping surfaces. The CDC does not recommend using intermediate- and low-level disinfectants to reprocess critical or semi critical dental instruments.

CDC Guideline for Disinfection and Sterilization in Healthcare Facilities, 2008; Centers for Disease Control and Prevention. Guidelines for Infection Control in Dental Health-Care Settings— 2003. MMWR 2003;52(No. RR-17):[inclusive page numbers]. FDA Processing/Reprocessing Medical Devices in Health Care Settings: Validation Methods and Labeling DRAFT GUIDANCE May 2, 2011.

16 – MAINTENANCE cont'd

CLEANING:

METAL COMPONENTS:

Use mild detergent and water or any of the commercially available sprays, such as 409, Fantastic, or others, with a soft cloth or sponge. DO NOT USE ABRASIVES as these will permanently scratch the finish.

PLASTIC, RUBBER, AND PAINTED SURFACES:

Use mild detergent and water or any of the commercially available sprays, such as 409, Fantastic, or others, with a soft cloth or sponge. DO NOT USE ABRASIVES as these will permanently scratch the finish.

CORIAN® SURFACES:

Your Corian surfaces are delivered with a matte/satin finish and any of the above cleaners are acceptable. Minor surface blemishes can be brought back to a like-new finish with the use of a mild abrasive cleaner such as Comet on their own or in conjunction with a green or white Scotch-Brite Pad.

Clean with warm, soapy water or any non-abrasive ammonia based cleaner or disinfectant. Dry thoroughly after cleaning. For tougher stains, use Clean EnCounters® from DuPont.
Do NOT use window-cleaning solutions (they will leave a waxy build-up), ScotchBrite or other abrasive pads.
Do NOT use a any cleaning products that contain HYDROGEN PEROXIDE.

For more information on cleaning CORIAN surfaces, go to:
http://www.dupont.com/products-and-services/construction-materials/surface-design-materials/brands/corian-sol¬id-surfaces/articles/how-to-clean-corian.html

Dried composites can be scraped off using a single-edged razor blade or equivalent, being cautious not to dig into the surface.

If the surface becomes too scarred to be renewed with the above procedures, a resurfacing can be done. Please contact us or any Corian-certified installer for the correct procedure.

*The FDA recommends that items contaminated with blood or body fluids, which might contain blood-borne pathogens, must receive intermediate level disinfection with a product having an EPA-registered claim for activity against hepatitis B after cleaning.

16 – MAINTENANCE cont'd

DISINFECTING:

INSTRUMENTS AND WORKSTATION:

Infection control in the dental environment is always a high priority for both the user and the patient. It is the responsibility of the practitioner to be familiar with best practices and protocols for disinfecting of instruments and surfaces as recommended by CDC, ADA and OSHA.

In addition to the General Guidelines, the CDC recommends general cleaning and disinfecting of clinical contact surfaces, dental unit surfaces, and countertops at the end of daily work activities. Cleaning and disinfection are required if surfaces have become contaminated since their last cleaning. To facilitate daily cleaning, keep treatment areas free of unnecessary equipment and supplies.

To disinfect Corian surfaces, use a suitable chemical germicide (for example DisCide Ultra Disinfectant Spray). Dental devices that are connected to the dental water system and that enter the patient's mouth (for example; handpieces, ultrasonic scalers, or air/water syringes) must be operated to discharge water and air for a minimum of 20–30 seconds after each patient.

Most of the surfaces are compatible with commonly used disinfectants, however if discoloration is noticed (especially hoses) it would be advisable to change cleaning products. If using a spray, use sparingly around electrical devices and components.

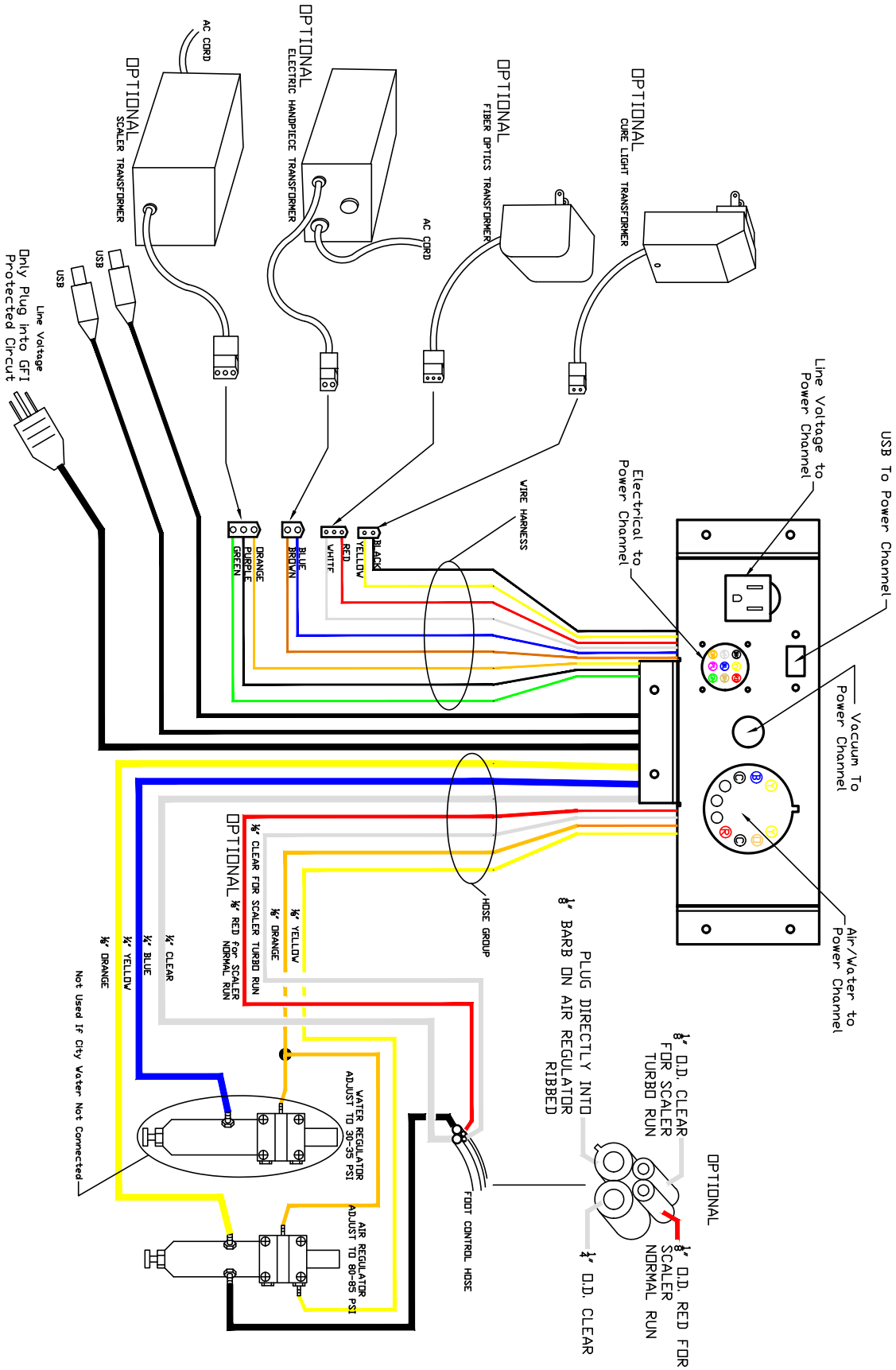
USB To Power Channel
Line Voltage to Power Channel
Vacuum To Power Channel
Air/Water to Power Channel
Electrical to Power Channel
WIRE HARNESS
OPTIONAL
CURE LIGHT TRANSFORMER
OPTIONAL
FIBER OPTICS TRANSFORMER
OPTIONAL
ELECTRIC HANDPIECE TRANSFORMER
AC CORD
OPTIONAL
SCALER TRANSFORMER
AC CORD
USB
USB
Line Voltage
Only Plug Into GFI Protected Circuit
BLACK
YELLOW
RED
WHITE
BLUE
BROWN
ORANGE
PURPLE
GREEN
HOSE GROUP
PLUG DIRECTLY INTO 1/8" BARB ON AIR REGULATOR RIBBED
1/8" O.D. CLEAR FOR SCALER TURBO RUN
OPTIONAL
1/8" O.D. RED FOR SCALER NORMAL RUN
1/4" O.D. CLEAR
FOOT CONTROL HOSE
1/8" CLEAR FOR SCALER TURBO RUN
OPTIONAL 1/8" RED FOR SCALER NORMAL RUN
1/8" YELLOW
1/8" ORANGE
WATER REGULATOR ADJUST TO 30-35 PSI
AIR REGULATOR ADJUST TO 80-85 PSI
1/4" CLEAR
1/4" BLUE
1/4" YELLOW
1/8" ORANGE
Not Used If City Water Not Connected