ergonomic products

Performance Without Compromise™

Specification and Installation Guide

D2A_ series: 32” Hygiene Inwall Workstation

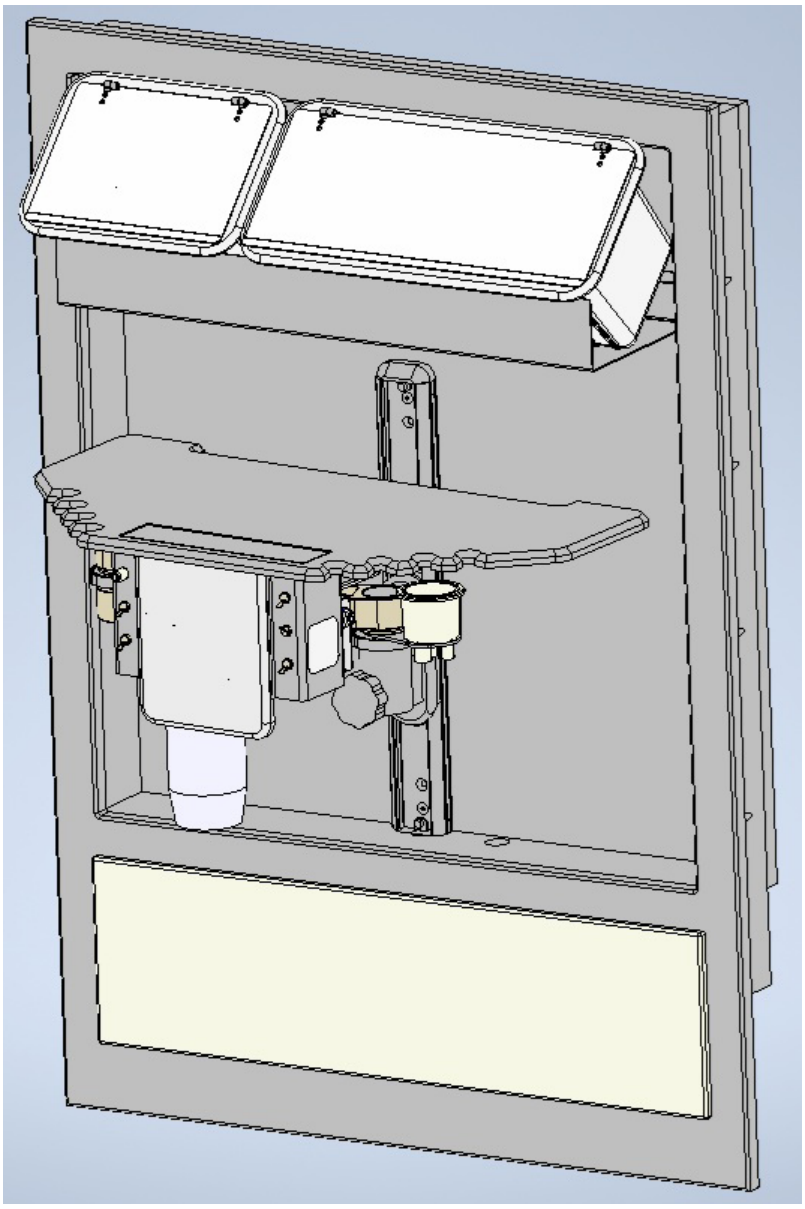

D2A1

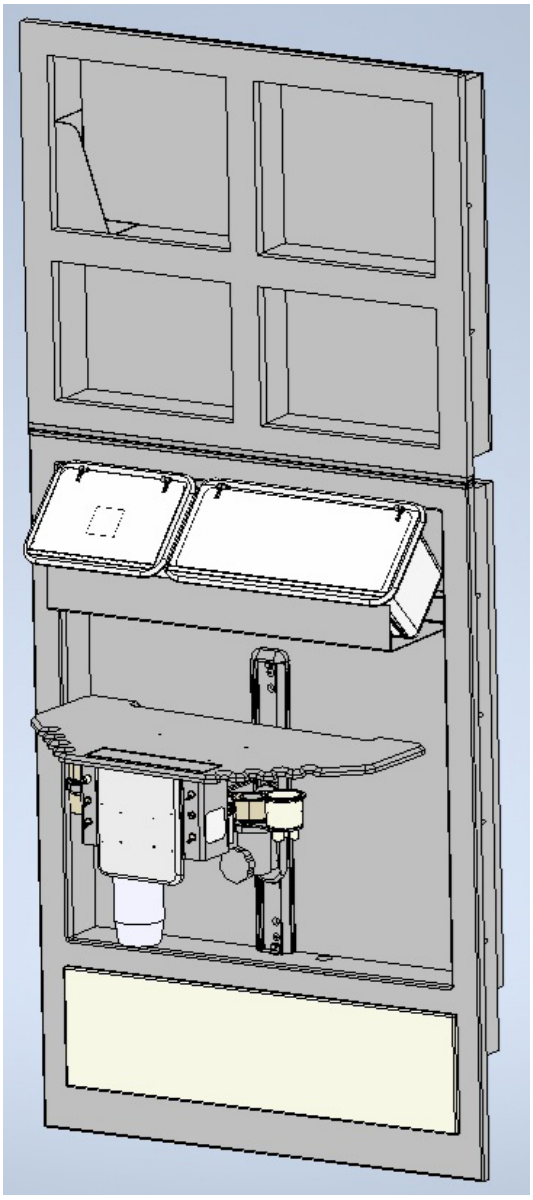

D2A4

Shown with optional upper section

Product ID: D2A_

Manual version: J

Thank you for purchasing the Ergonomic Products D2A_ series: 32” Hygiene Inwall Workstation.

Years of research by dentists, engineers and designers have made this a uniquely effective product in the industry. We stand behind our equipment, and genuinely believe it to be the best available on the market.

Should you have any questions regarding the product’s installation or use, please don’t hesitate to call our customer service specialists at **1-866-ERGO-4-US.** We may also be reached via email at **equip@ergonomic-products.com.**

We hope you enjoy the benefits and quality of your new equipment and look forward to handling your future needs as you and your practice continue to grow!

- The Ergonomic Products Team

CONTENTS:

1. Introduction 3
2. Specifications..... 5
3. Basic Anatomy of the Workstation 6
4. Power Channel Face Plate.....7
5. Underside of Channel.....8
6. Foot Pedal.....9
7. Options for Workstation 10
8. Using Your Workstation.....11
9. Required Tools / Unpacking and Installation..... 14
10. Standard Parts List 15
11. Workstation Assembly.....16
12. Maintenance..... 24
13. Trobleshooting 31

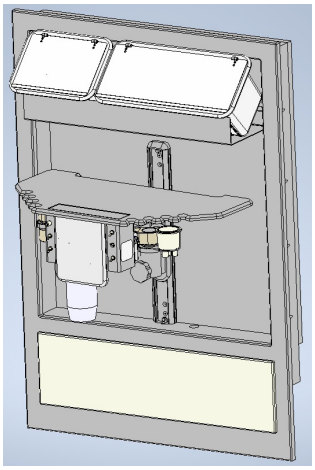

QUESTIONS?

Call our Customer Service Specialists at:

1-866-ERGO-4-US.

1 - INTRODUCTION

SYMBOLS USED IN THIS MANUAL AND ON PRODUCT LABELS

The following symbols are used in this manual and on product labels.

Symbol	Meaning
	This symbol means that you must refer to the documentation that came with your device.
	This symbol indicates a Warning. Warnings alert the user to the possibility of serious injury or death if the equipment is not operated properly.
	This symbol indicates that the device is a Type B piece of equipment and has a certain degree of protection against electric shock. The B Type refers to applied parts that are generally not conductive and can be immediately released from the patient.
	This symbol indicates that you must not dispose of any electronic components along with general waste.
	This symbol appears next to the next to the manufacturer’s contact information.
	This symbol appears next to the date of manufacture.
	This Symbol Indicates Pushing Prohibited

1 - INTRODUCTION CONT’D

INTENDED USE

The Ergonomic Products Workstation is a dental operative unit, which is an AC-powered device that is intended to supply power to and serve as a base for other dental devices and accessories. The device is to be operated and used by dentists and other legally qualified professionals.

This product has been tested and certified by SGS to meet Standard for Medical Electrical Equipment, ANSI/AAMI ES60601-1: 2005 + C1:2009 + A2:2010 and CAN/CSA-C22.2 No. 60601-1:2008 + C2:2011

CONTRAINDICATIONS

There are no known contraindications for the use of this device.

WARNINGS AND PRECAUTIONS

Warnings alert the user to the possibility of serious injury or death if the equipment is not operated properly.

Only properly trained and authorized personnel must use this equipment.

Do not modify this equipment without authorization from Ergonomic Products, Inc.

Read and understand all warnings, precautions, and operating instructions before use.

To avoid risk of electric shock, connect this equipment only to an electrical supply with a protective earth ground. Do not bypass the grounding circuitry.

The device might cause interference with other electronic devices while in use. Ensure that other medical devices used in the treatment office do not receive interference from this device.

A dental unit might include magnets which might affect the function or programming of some implantable pacemakers or defibrillators. People who have devices programmed to respond to a magnet must avoid dental units with magnets.

Improper installation of the syringe can result in injury or damage. Refer to the syringe manufacturer’s documentation for instructions on proper installation and use.

Do not position equipment so it is difficult to operate the disconnect device.

Do not use a socket multiplier or an extension cord to connect the Workstation to the electrical supply.

To avoid the risk of electric shock, do not connect equipment that must be connected a multi-socket outlet with a separating transformer directly to an electrical wall outlet.

Connect only those items that are part of the Workstation or have been approved by Ergonomic Products, Inc. to be compatible with the Workstation.

It is mandatory that metal reusable syringe tips are sterilized between each patient to prevent cross contamination. Please follow the manufacturer’s recommended practices for sterilization.

2 - SPECIFICATIONS

STANDARD FEATURES

- 1 High Speed Air
- 1 Low Speed Air
- 1 A/W Syringe
- 1 HVE
- 1 Saliva Ejector
- 1 EP Consumable Bin
- 1 EP Biohazard Bin
- Scaler
- 2 Liter Water Bottle
- Aux Air/Water Ports
- Standard Foot Pedal
- 3-point Swivel for 2-hand/4-hand convertibility

OPTIONAL FEATURES

- Fiber Optic Upgrade includes Light Kit, And (1 or 2) 5 or 6 pin Hose.
- 2nd High Volume Suction
- Cure Light
- Upper Cabinet (D2A4)
- 3rd Air Driven Handpiece
- 2nd Air/Water Syringe
- 1 Dedicated Air Syringe
- Aux Power/USB Ports

DIMENSION SPECIFICATIONS

Electrical Specifications*
Electric 120VAC, 60HZ, 8A
Fuse Value Label at Point of Use

Conforms to
US/ANSI/AAMI ES60601-1 2005+C1+A2
CA/CNCSA-C22.2 No. 60601-1

Air, Water, Electric Auxiliary
Air, 3/8 Dental Style Female QD, 80 psi
Water, ¼ Dental Style Female QD, 30-35 psi

Storage and Transportation Conditions
-30° C to +50 C
10% to 90% Relative Humidity
Standard Atmospheric Pressure

Use Conditions
Typical Dental Office Environment
Standard Atmospheric Pressure

Materials
Corian Solid Surface, Aluminum, Stainless Steel, and Powder-Coated Steel

*Refer to specific manufacturer’s documentation or the actual transformer for input and output voltages, amp ratings, and Hz ratings.

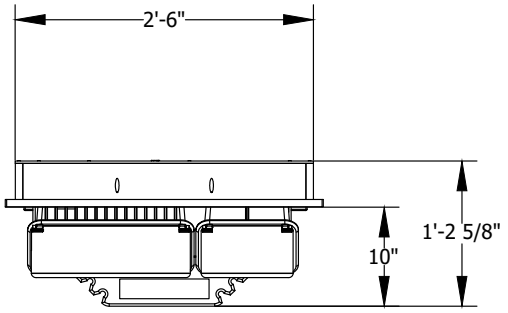

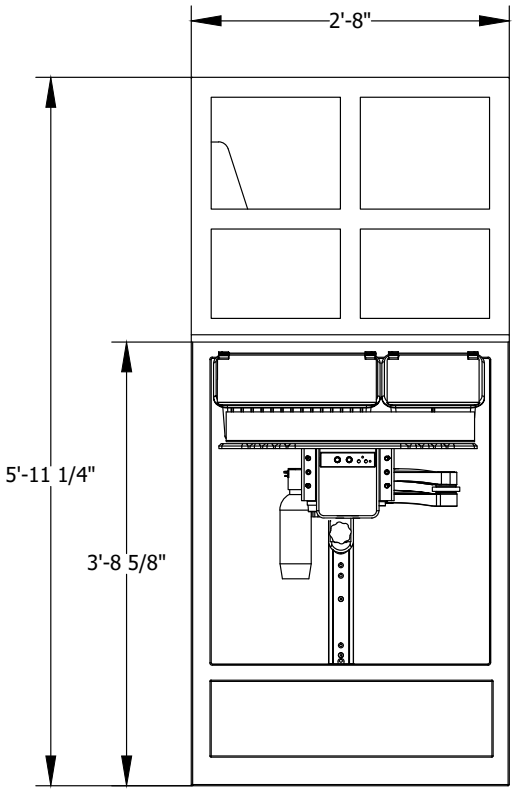

Shown with optional Upper Section

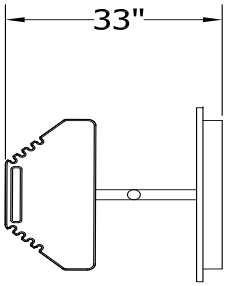

FULLY EXTENDED ARM DIMENSION

3 - BASIC ANATOMY OF THE WORKSTATION

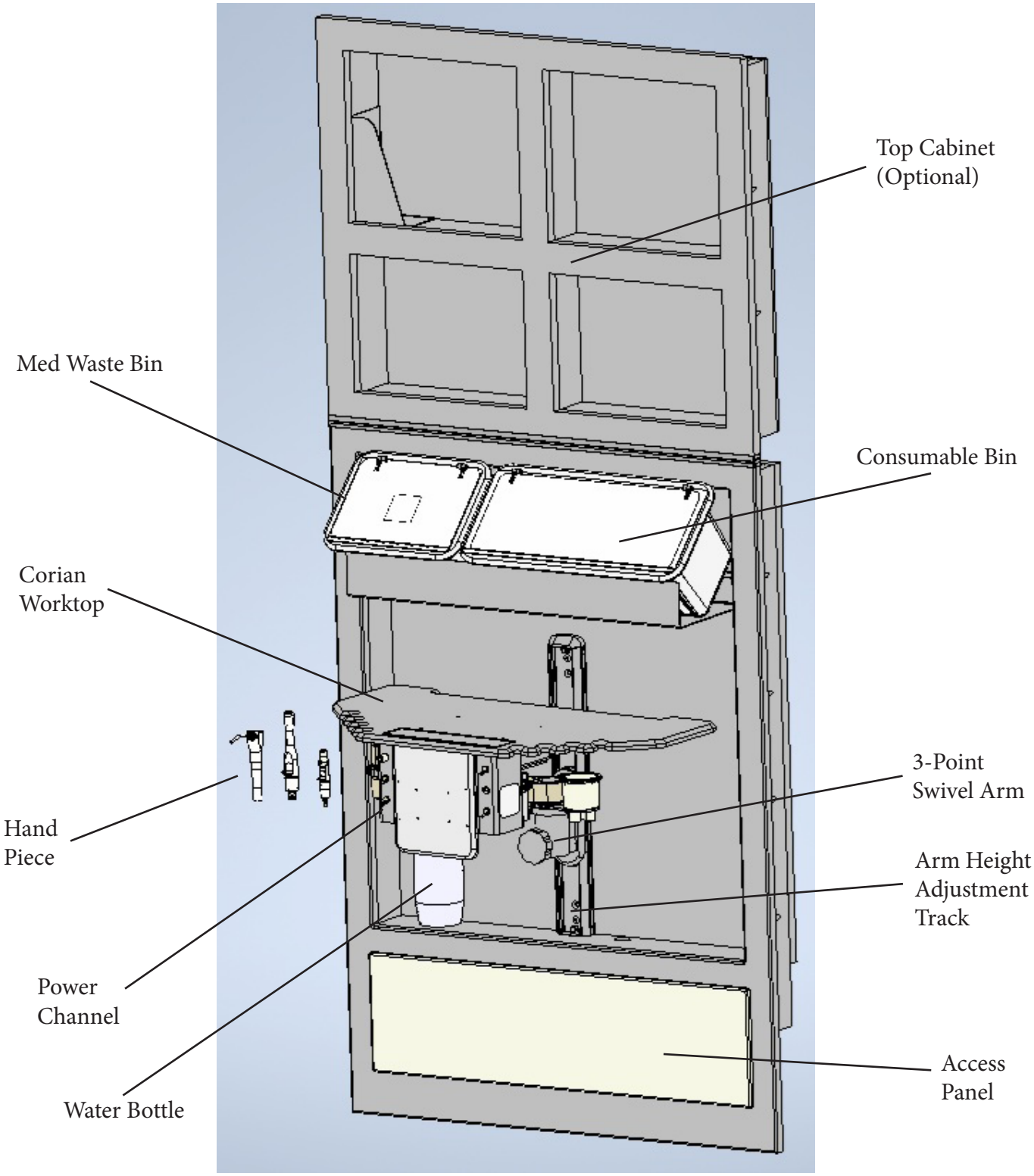

4 - POWER CHANNEL FACE PLATE

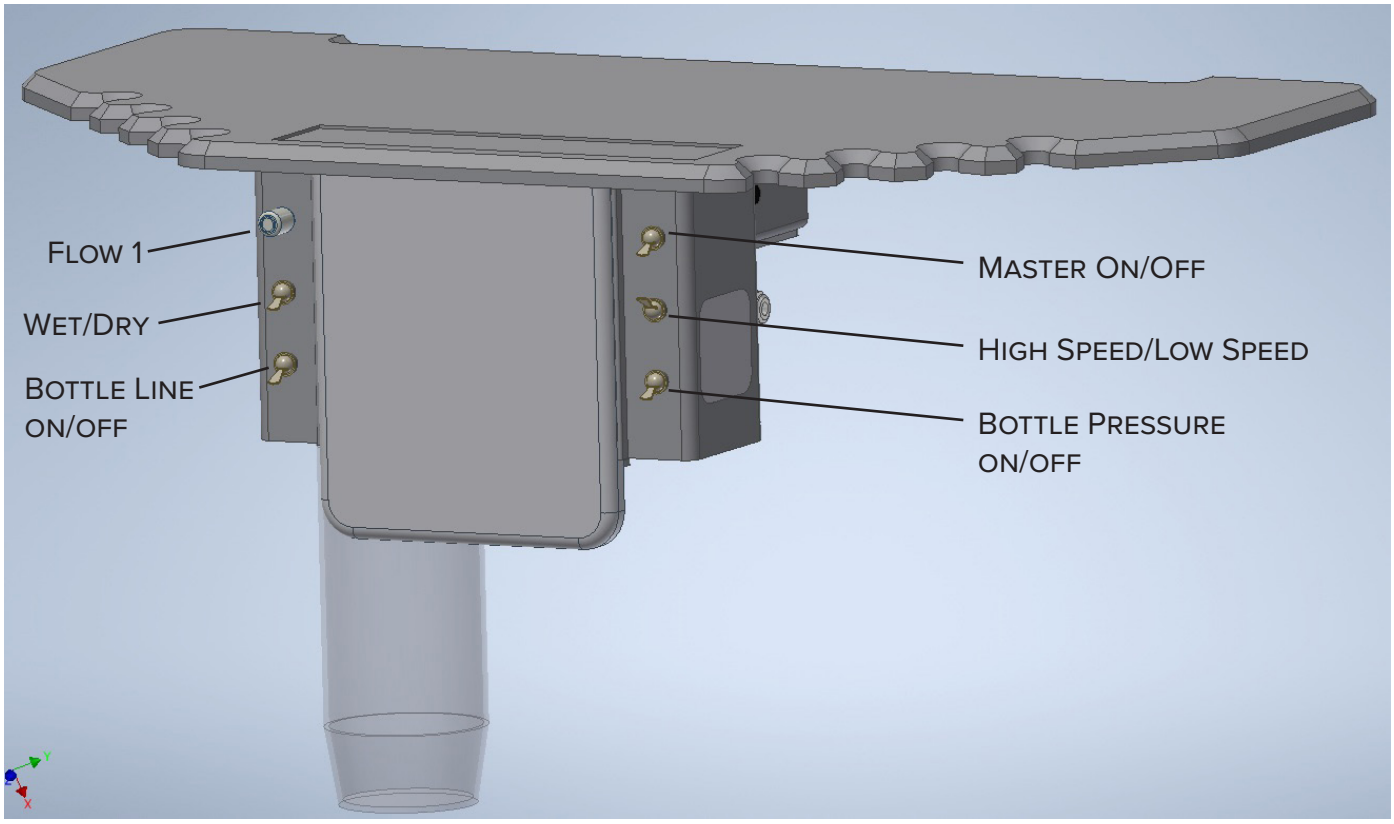

Flow 1 - Controls the flow of water to the right handpiece.

Wet/Dry – Switch to dry, for air only to the right handpeice. switch to wet, for water and air to the right handpiece.

Bottle Line On/Off – Switch is on for bottled water. Switch off for city water.

Master On/Off – Switch on for power. Switch off for no power.

High speed/Low Speed – High speed switch turns on water and air to the right handpiece. Low speed turns on only air to the left handpiece.

Bottle Pressure On/Off – Switch on for the unit to be pressureized. Switch off when unit is not in use.

Scaler operation (if applicable)
Scaler is controled by the small button on rheostat (floor pedal)
unit will not operate unless master switch is on

5 - UNDERSIDE OF CHANNEL

The below image shows the underside of the channel and its avaibale functions. (Please note options on your channel may differ from that shown in the image below.)

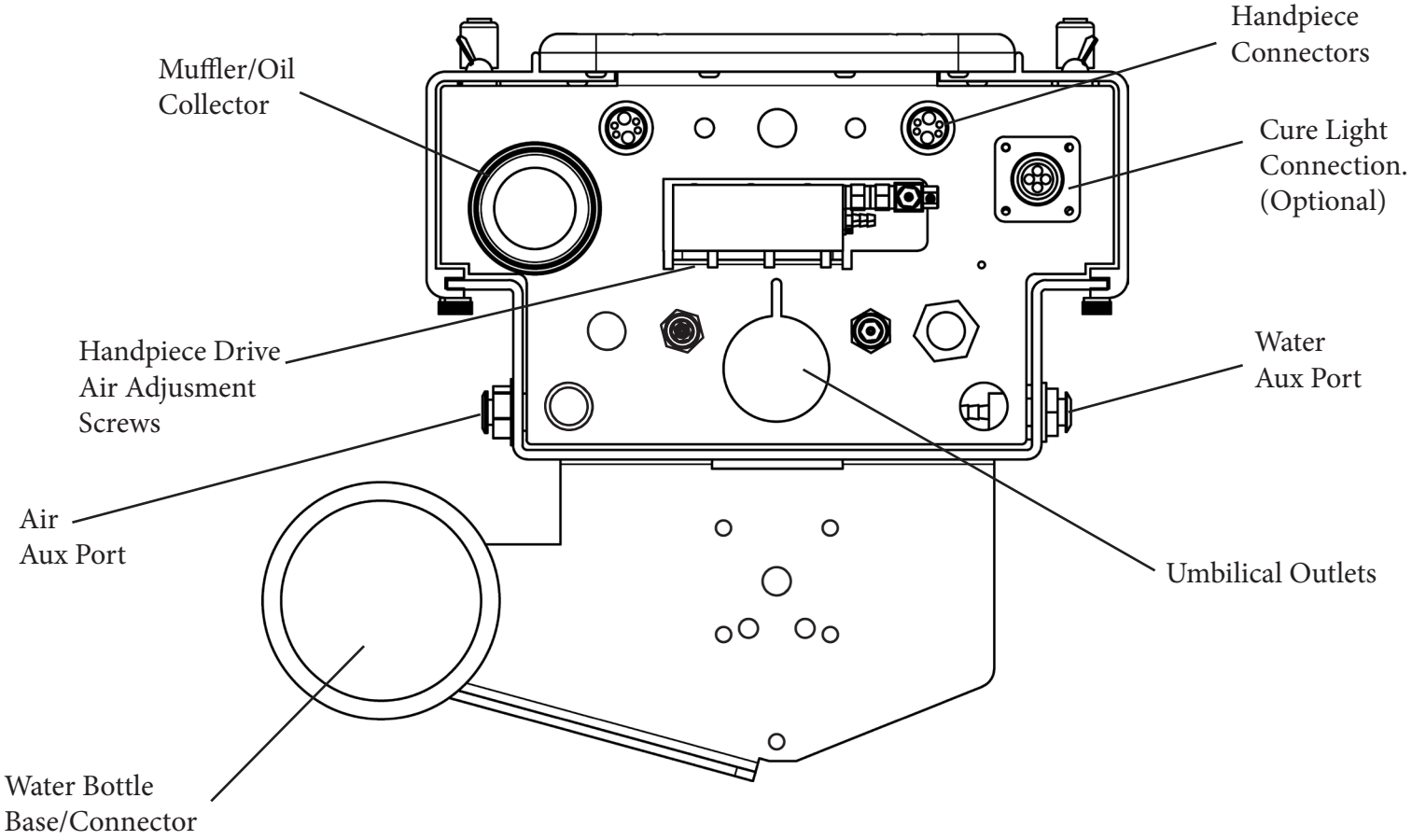

6 - FOOT PEDAL

Refer to Fig 6.1 to review your foot pedal type.
Refer to Fig 6.2 for a detailed view of the rheostat running through the floor to the toe of the chair.

Fig 6.1

Standard Foot Pedal
Drive Air

Dual Button Foot Pedal
Turbo Sensor

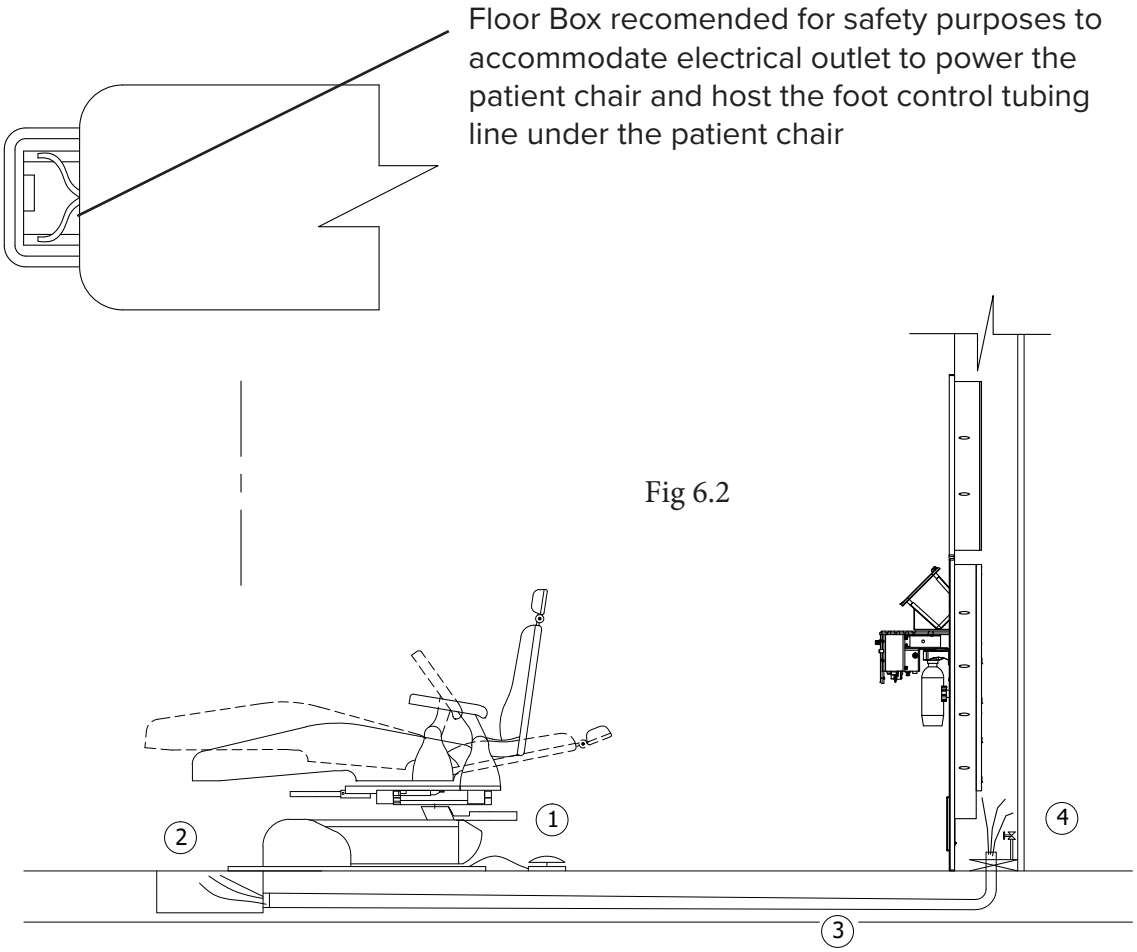

Fig 6.2

Foot pedal tubing (1) is connected to the (2) floor box. Tubing is fed under the floor through conduit (3) abd then is connected to the Air Regulator (4).

7 - OPTIONS FOR YOUR WORKSTATION

Curing Light
If Curing Light provided, refer to manufacturer’s documentation for proper operation of the curing light for the workstation.

Handpiece Compatibility
The delivery system of the Ergonomics Products Workstation has been designed to be compatible with air driven handpieces that conform to ISO 13294.
Tubing for air driven handpieces is available in 4-5 hole ISO B tubing or 6-hole ISO C tubing. The end user has responsibility to acquire appropriate handpieces for use with the Workstation. Your country might have certain regulations in regards to what handpieces are acceptable to use. Refer to your local dealer for more information.
For instructions and details about accessories provided from other manufacturers, refer to their product documentation.

8 - USING YOUR WORKSTATION

There are many benefits to delivery with the Inwall Workstations. All materials, handpieces, and instruments are consolidated into one location. This simplifies access to tools and makes it easier to resupply items for the Hygienist. This significantly increases productivity and, as a result, your appointments will run smoother and with less interruption. An additional benefit is that the Inwall Workstation focuses almost everything out of the patient’s field of view and, therefore, the patient feels less threatened by the equipment.

When fully equipped, your Inwall Workstation has the ability to allow the hygienist to treat the patient in a highly efficient manner. The Workstation Corian with mechanical enclosure may be moved and positioned for the most comfortable and efficient positioning. The consumables and medical waste bins are within easy reach for supplying standard procedures. With a rear counter for a computer workstation and overhead resupply cabinet for larger items, the room becomes a complete hygiene office unto itself.

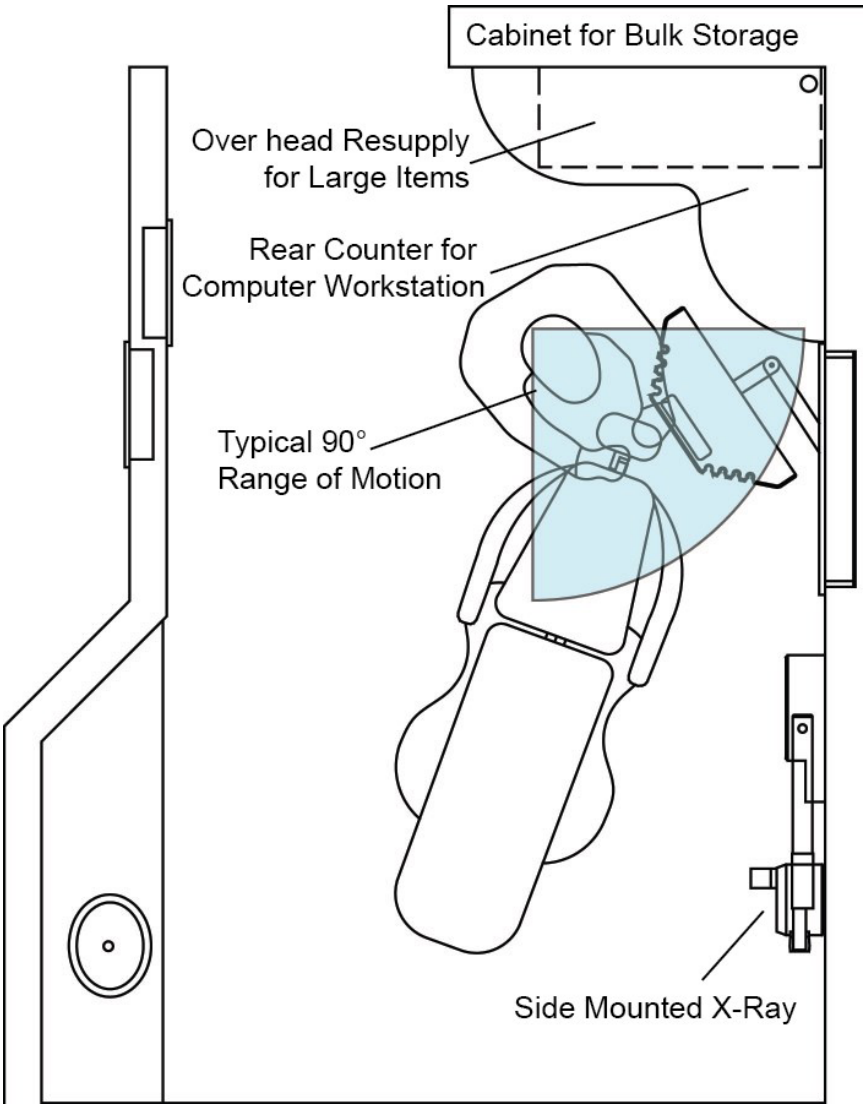

8 - USING YOUR WORKSTATION CONT’D

SETUP AND RESTOCKING YOUR SUPPLY TUBS

Tubs can be stocked with any materials for any clinical procedure. The tubs serve to keep materials organized and are easy to visually inventory. This minimizes problems with missing supplies during the middle of procedure appointments. Your tub will hold 90% of your expensive materials (non-consumables). Tubs make drawers unnecessary, preventing searching for missing material. The tubs allow you to have your inventory in a central place in the room, so your assistant can easily see when material inventory is getting low. You will be able to stock what you need for a week or two.

The basic materials to place directly into the tubs are, for example, composite capsule tips, crown cement powder and liquid, temporary cements, matrix bands, retraction cord and astringent. Bonding systems should also be stored in the tub. Other materials can be placed in small clear containers with lids, such as those that your lab uses for crowns and bridges. We find that this works well with polishing discs and with articulating paper that is pre-cut. Primers, adhesives and catalysts all fit nicely into the dividers of the tub when removed from their original packaging. Disposable mixing wells should also be housed in the tubs. Size Two duplicate films also fit neatly into the tub and can be used for most of all unscheduled intraoral procedure x-rays. Bulk film sets for full x-ray series are transported with procedure setups.

The Workstation tub can be custom fit for any doctor’s or assistant’s needs. The tub should be used so that the assistant and doctor have everything they need for composite procedures, amalgam if utilized, any cementing procedures, and also all of the small materials needed for a crown or bridge preparation. This prevents the assistant from having to leave the room during a procedure. All materials can be set aside on the secondary deployment tray wiped down with a disinfecting cloth prior to being reset into the tub at the end of a procedure.

Using the tub also makes restocking of supplies much easier. The assistant can take the tub into the central resupply area where all excess materials are kept. The tub can then be surveyed, easily restocked, and returned to the treatment room quickly.

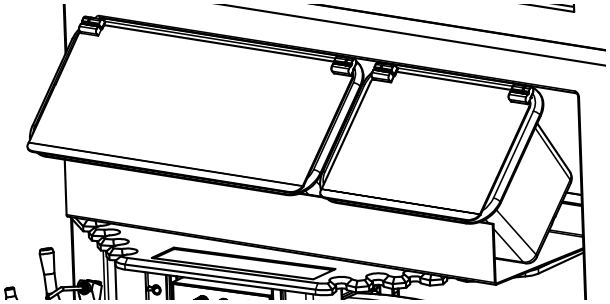

8 - USING YOUR WORKSTATION CONT’D

USING THE ARTICULATING SWIVEL ARM

To adjust your workstation, use the swivel arm to move the workstation in the desired position. Fig 8.1 shows the three points of articulation, Fig 8.2 shows the height adjustment.

Fig 8.1

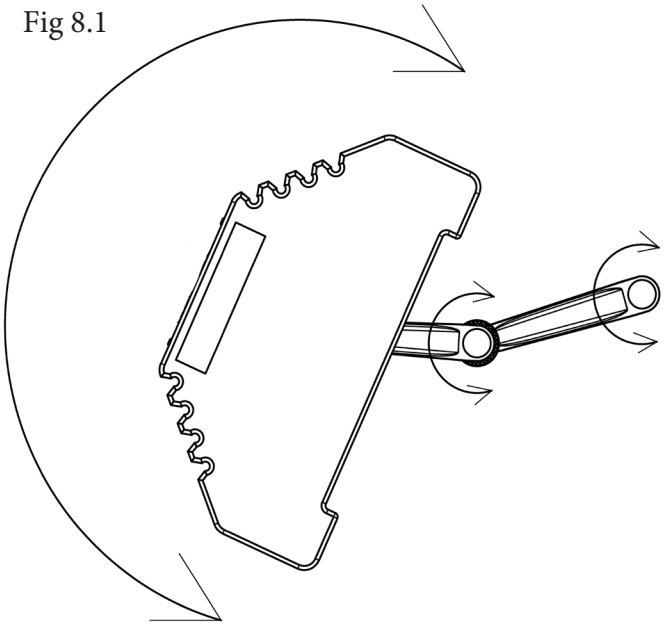

Fig 8.2

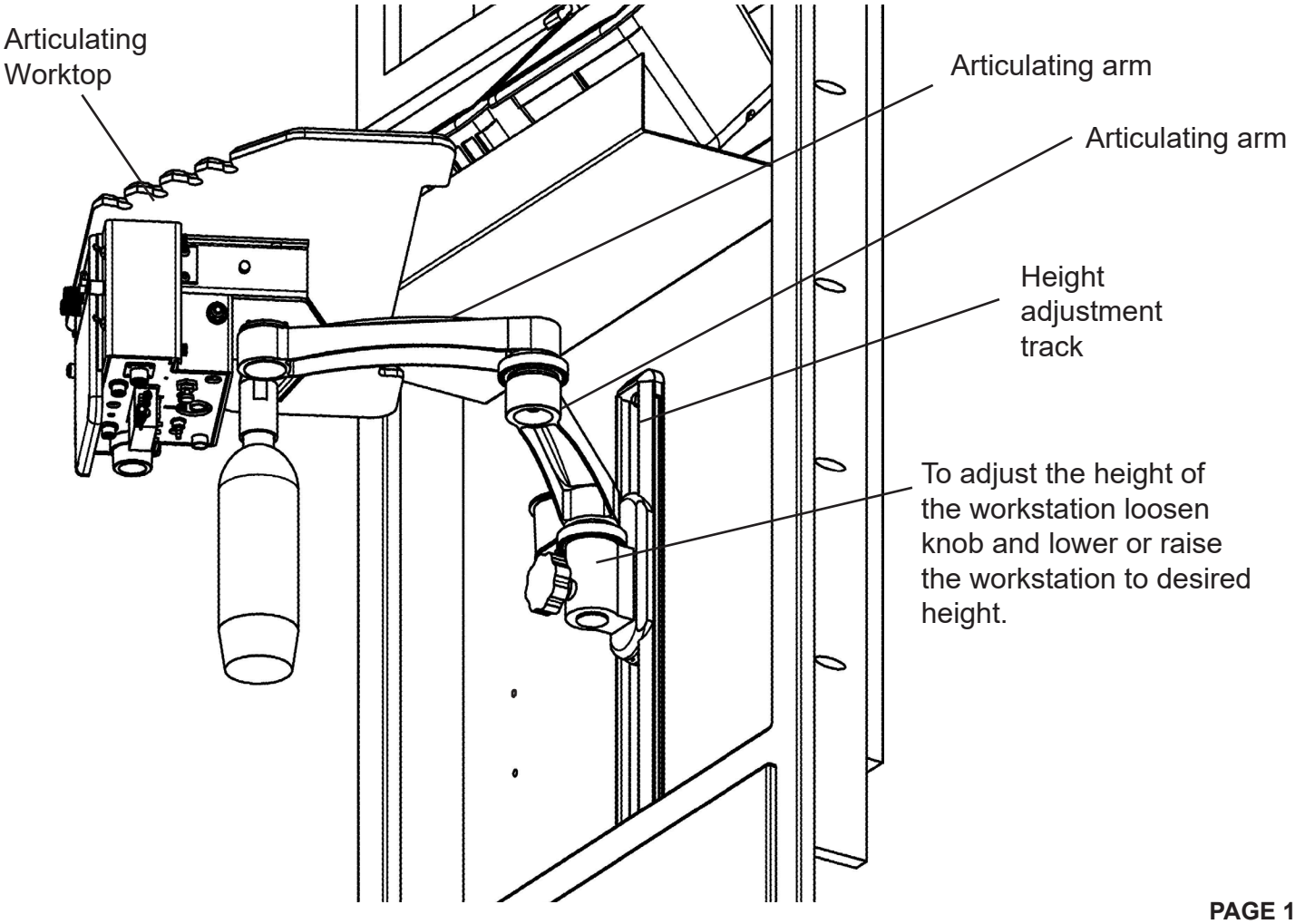

9 - REQUIRED TOOLS / UNPACKING AND INSPECTING

REQUIRED TOOLS

Utility Knife
5/32” Allen Wrench
3/16” Allen Wrench

1. Inspect shipping container for visible damage upon arrival. If transit damage is found, contact Ergonomic Products immediately. (This will expedite the corrective process).

2. Use safe lifting procedures to free the product from the container, and remove all packing material and accessory boxes from shipping container.

3. Laying individual components on clean surface to avoid scratching, and inspect contents. If damage is found, contact Ergonomic Products immediately.

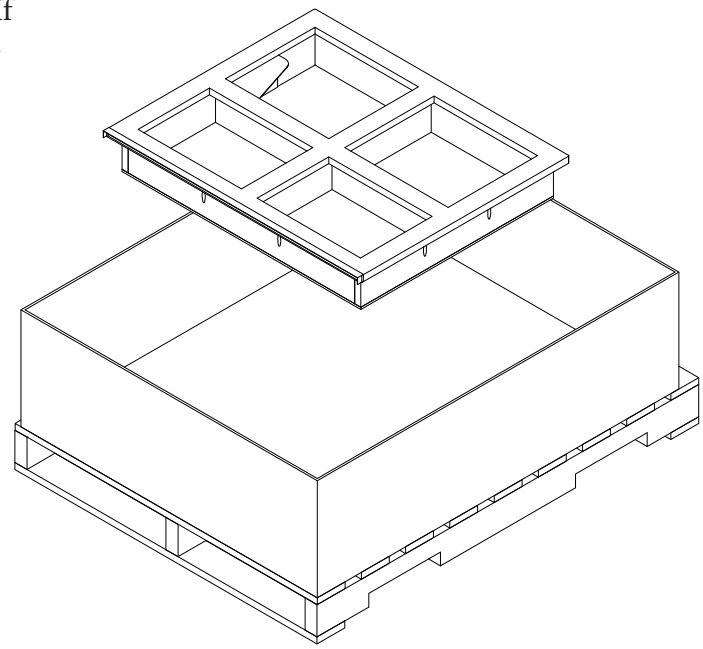

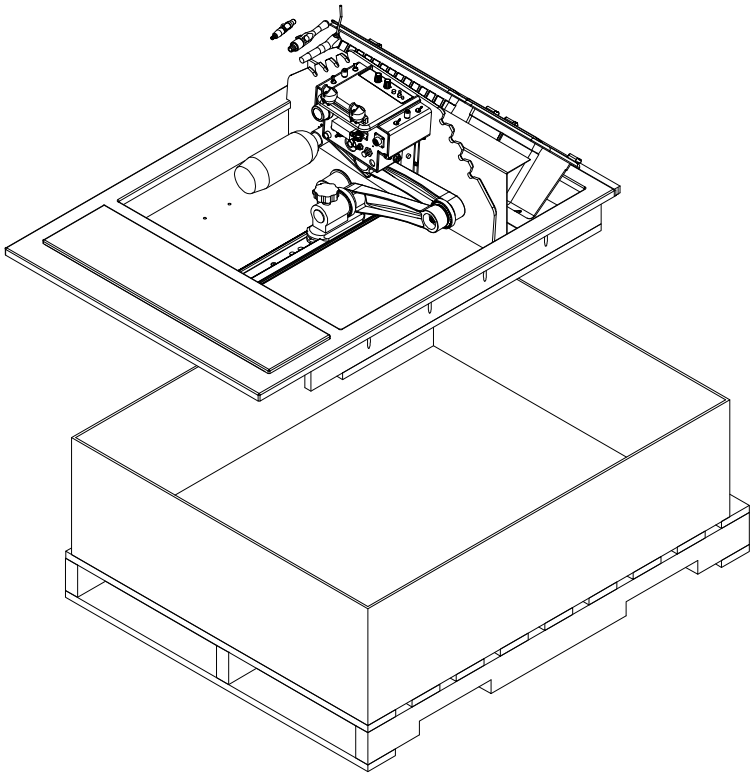

10 - STANDARD PARTS LIST

Check that the configuration / options for your product(s) are correct. If anything is damaged or missing, please contact Ergonomic Products customer service at 1-866-ERGO-4-US.

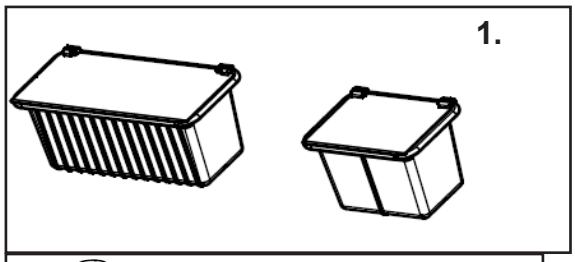

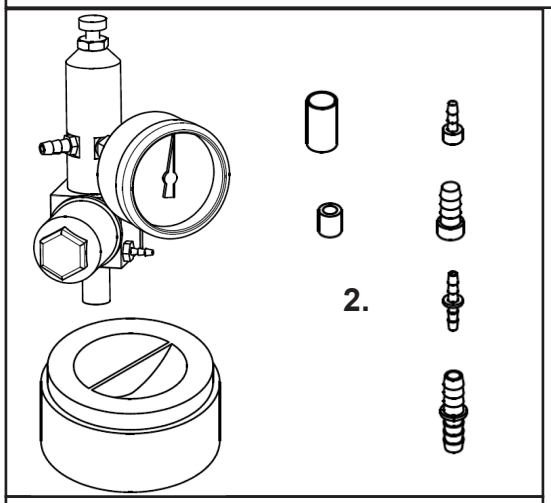

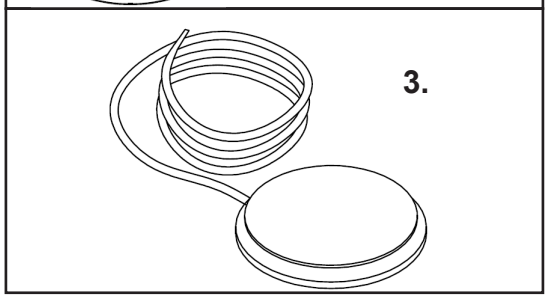

1. – (1) Medical Waste Bin and (1) Resupply Bin.

2. – Hose Connection Hardware Kit: (4) Sml Barb Connectors, (4) Lrg Barb Connectors, (10) Sml Sleeve Clamps, (10) Lrg Sleeve Clamps, (1) Sml Tubing Plug, (1) Lrg Tubing Plug, (3) Vacuum Canister Screens, (1) Air Master Shut-off Valve. **City water Kit will include (1) Water Master Shut-off Valve and (1) Orange tube with (1) Sml Tee Barb.**

3. – Standard Foot Pedal.

11 - WORKSTATION ASSEMBLY

The rough opening for the Hygiene Inwall Workstation 32” should be as shown in the following figure below. The opening for the Hygiene Inwall Workstation 32” short is shown on the next page. The minimum depth of the wall cavity is 4” for the Hygiene Inwall Workstation. There must not be any obstructions.

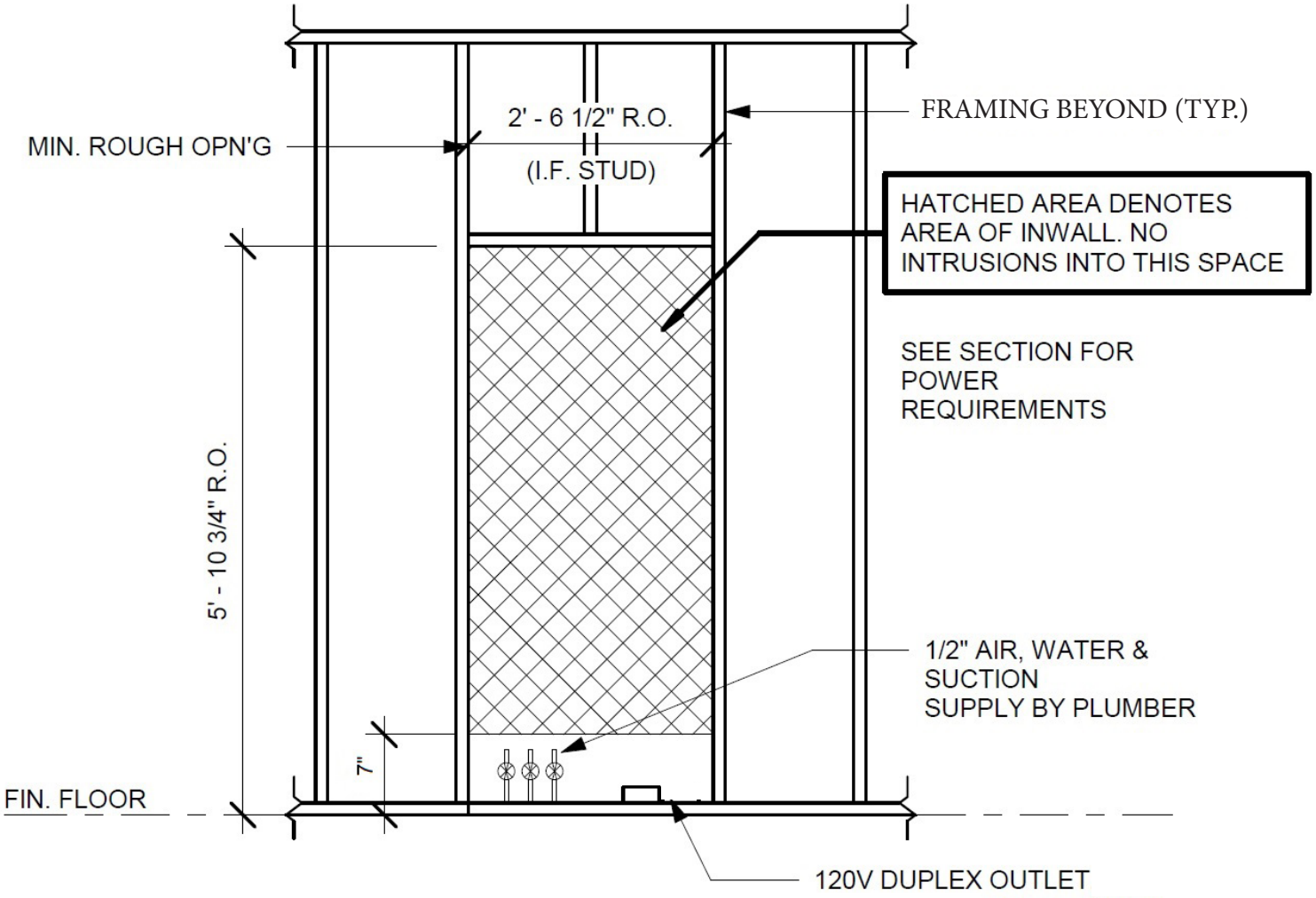

11 - WORKSTATION ASSEMBLY CONT’D

The rough opening for the Hygiene Inwall Workstation 32” short should be as shown in the following figure below. The opening for the Hygiene Inwall Workstation 32” short is shown on the next page. The minimum depth of the wall cavity is 4” for the Hygiene Inwall Workstation. There must not be any obstructions.

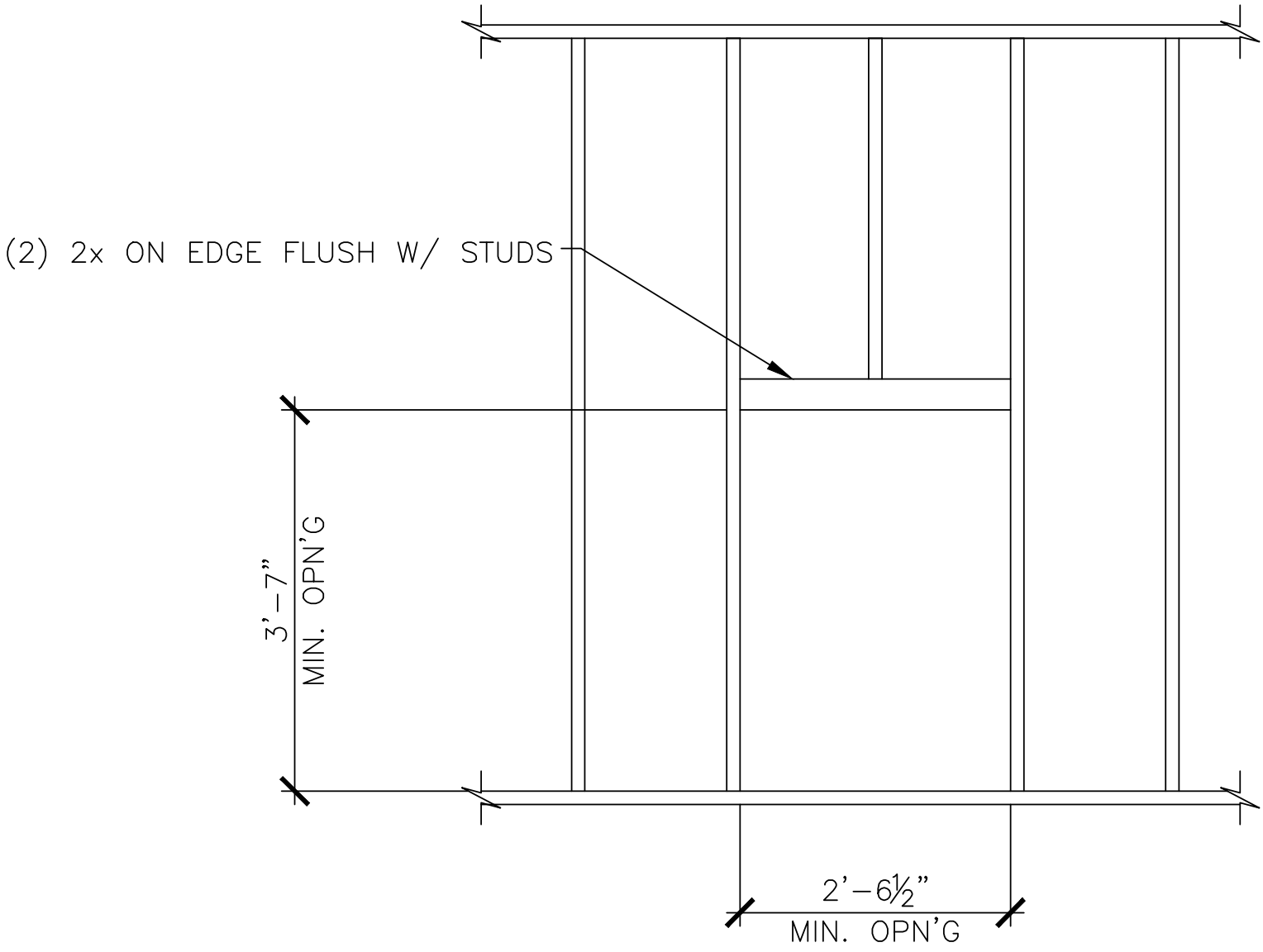

11 - WORKSTATION ASSEMBLY CONT’D

Providing Utilities

Follow these guidelines closely as there is a lot of equipment to be installed in the built in J-box area provided.

Note: If the foot control hose is not run under the floor, drill a 5/8” diameter hole in the bottom left side of the face frame. Plumbing must not stand higher than 5” from the bottom plate.

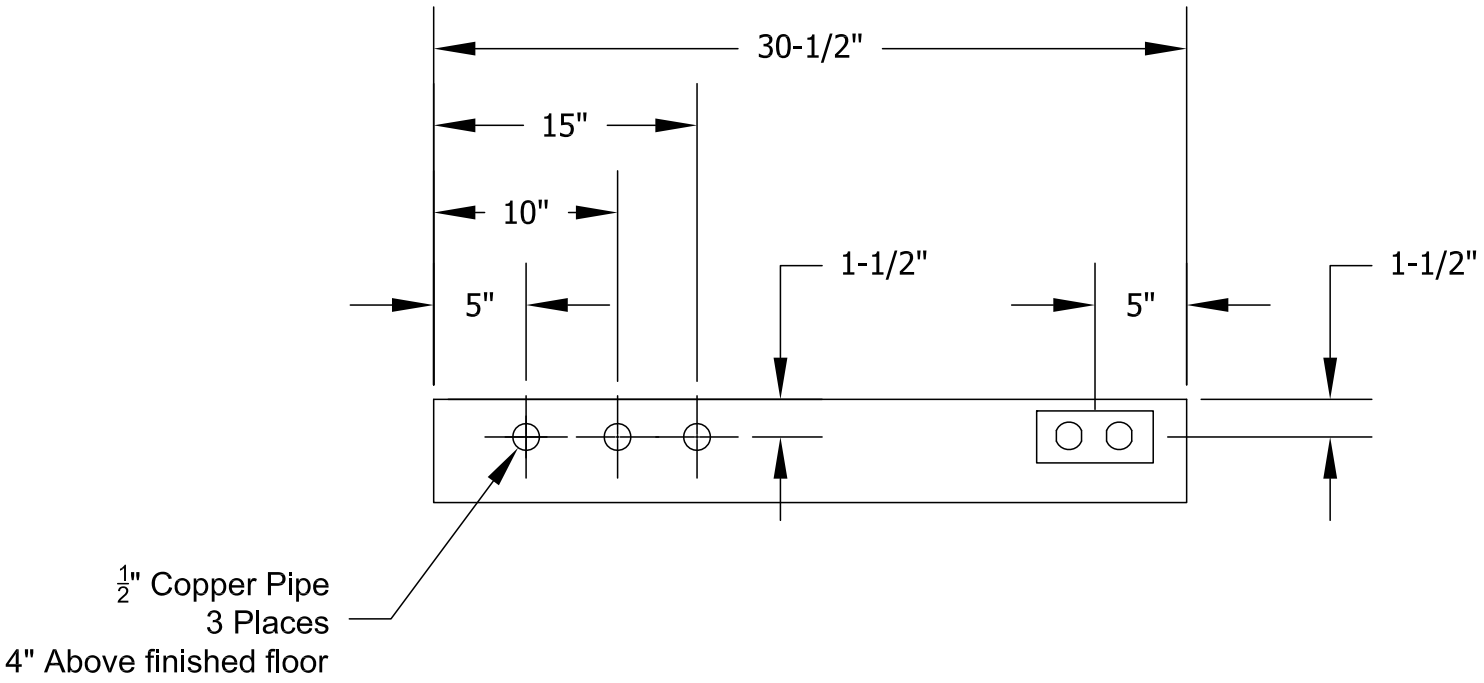

11 - WORKSTATION ASSEMBLY CONT’D

Location of the Inwall

For proper location of the Inwall workstation in relation to the chair, please follow the dimensions below.

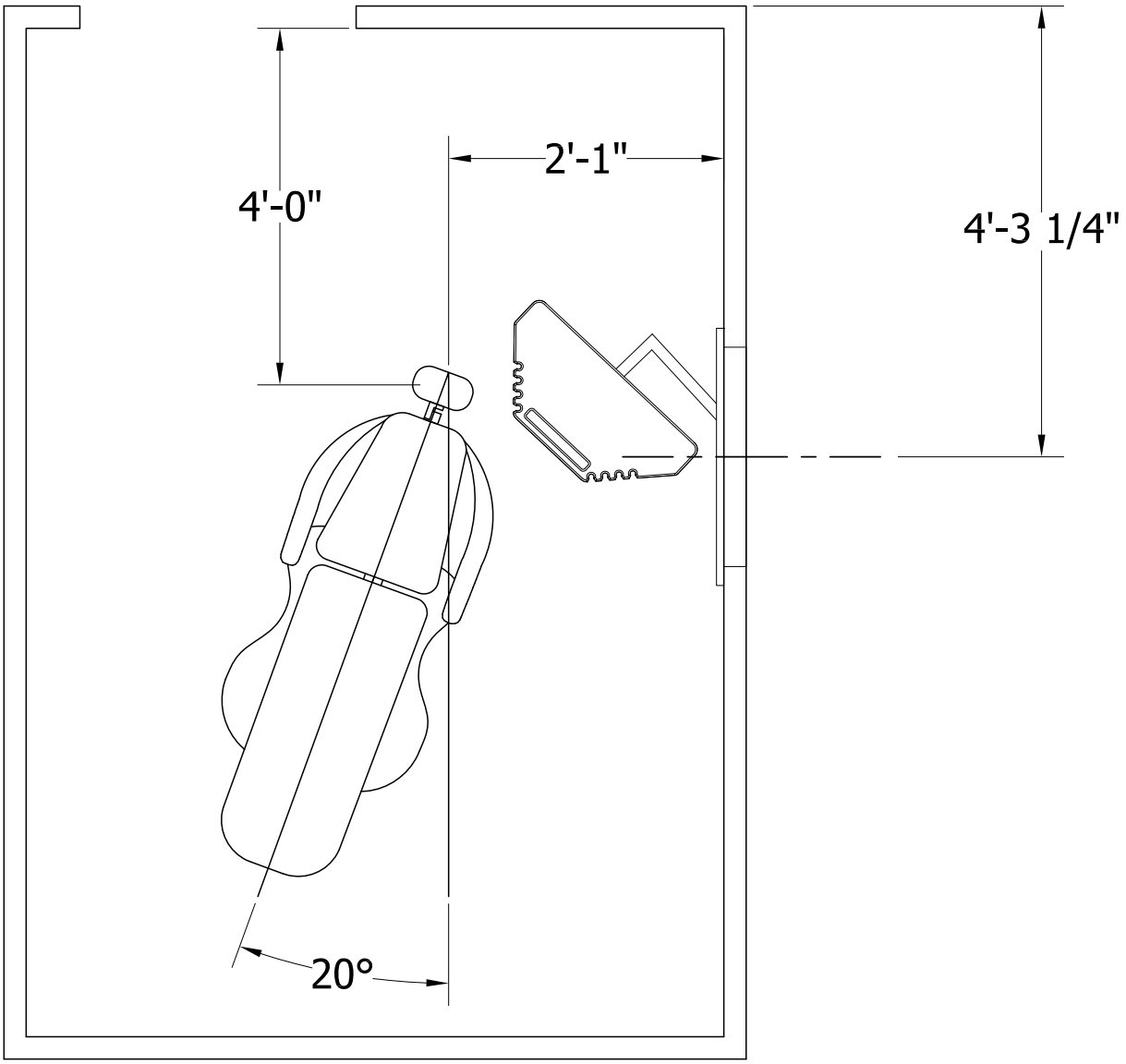

11 - WORKSTATION ASSEMBLY CONT’D

Installing lower section

1. Insert the lower section into the opening

2. Position the lower section so that bottom of face frame sits on the floor and centered in the opening.

3. Fasten lower section by drilling and fastening the 4 #8 x 2-1/2” flat-head screws as shown in the following figure below.

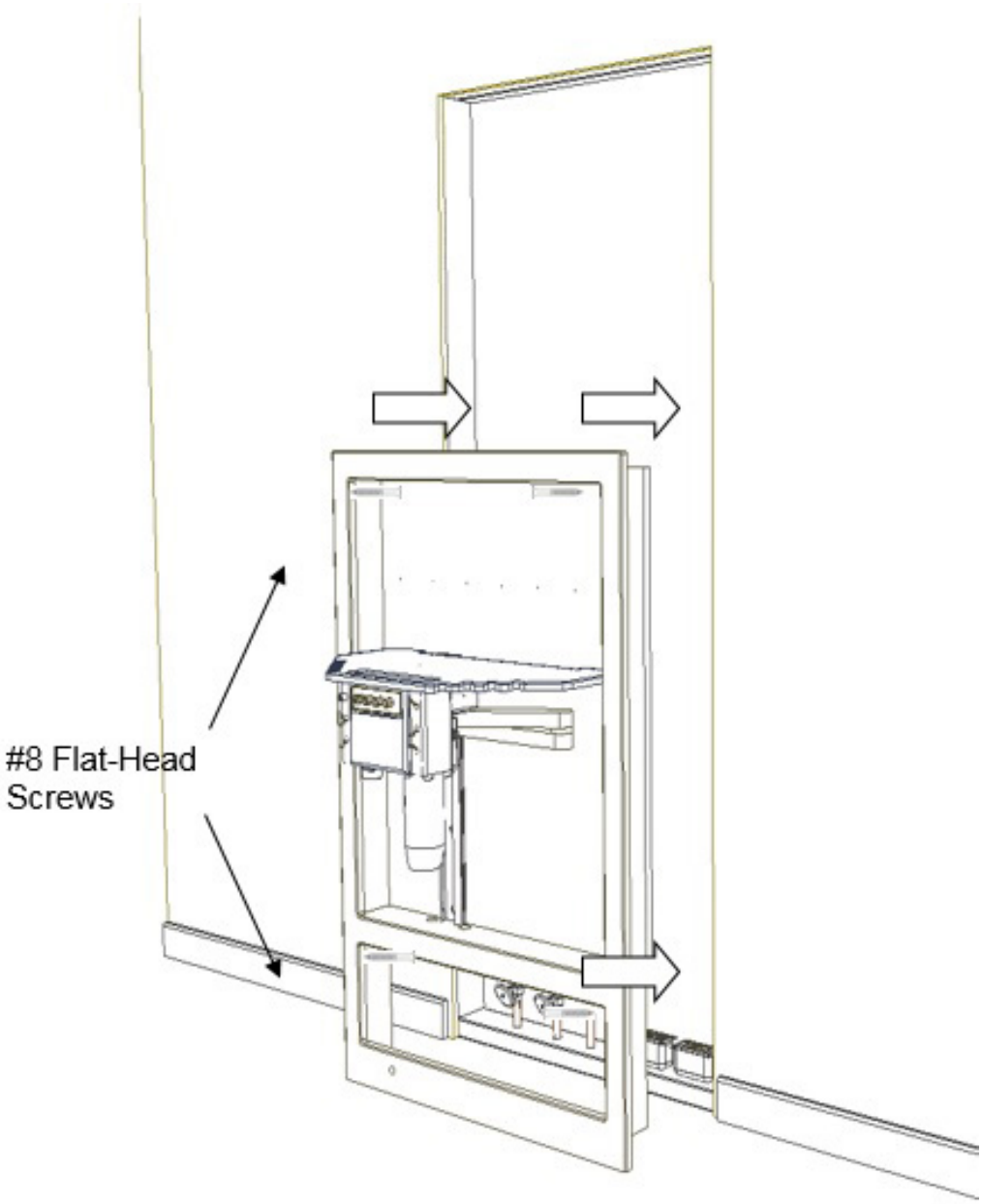

11 - WORKSTATION ASSEMBLY CONT’D

Installation the Optional Upper Section
(Disregard for Hygiene Inwall Workstation 32” short)

1. Install upper section, making sure it sits on lower section and tight against wall.

2. Secure same as bottom section with 4 #8 x 2-1/2” flat-head screws, as shown in the following figure.

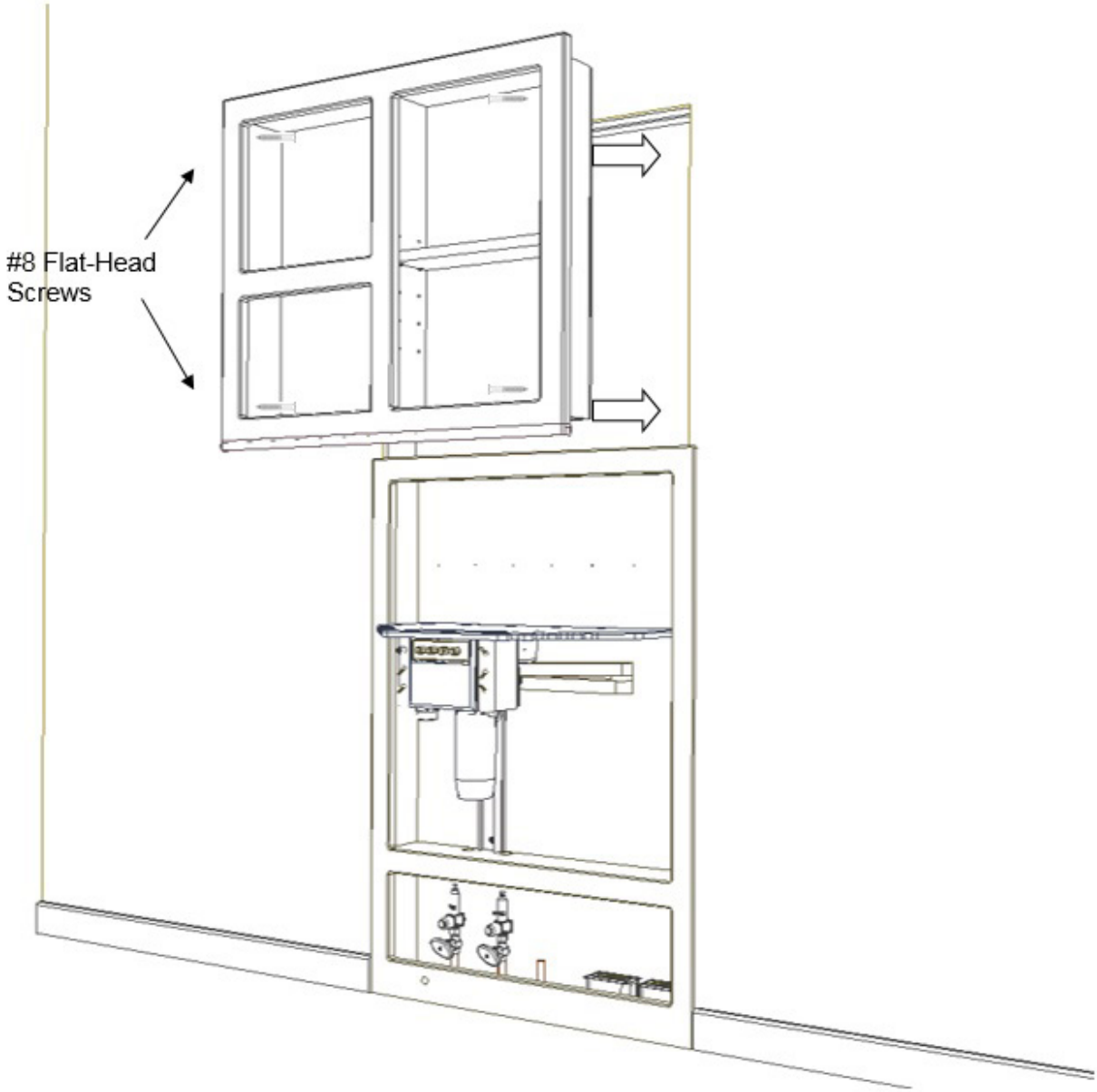

11 - WORKSTATION ASSEMBLY CONT’D

Plumbing and wiring

1. Install the air master shutoff and regulator and the water master shutoff and regulator (if used) on the appropriate 3/8” stops.

2. Using plumbing and wiring schematic (shown on next page), make all connections as shown.

Note: You might not use all the connections depending on certain options.

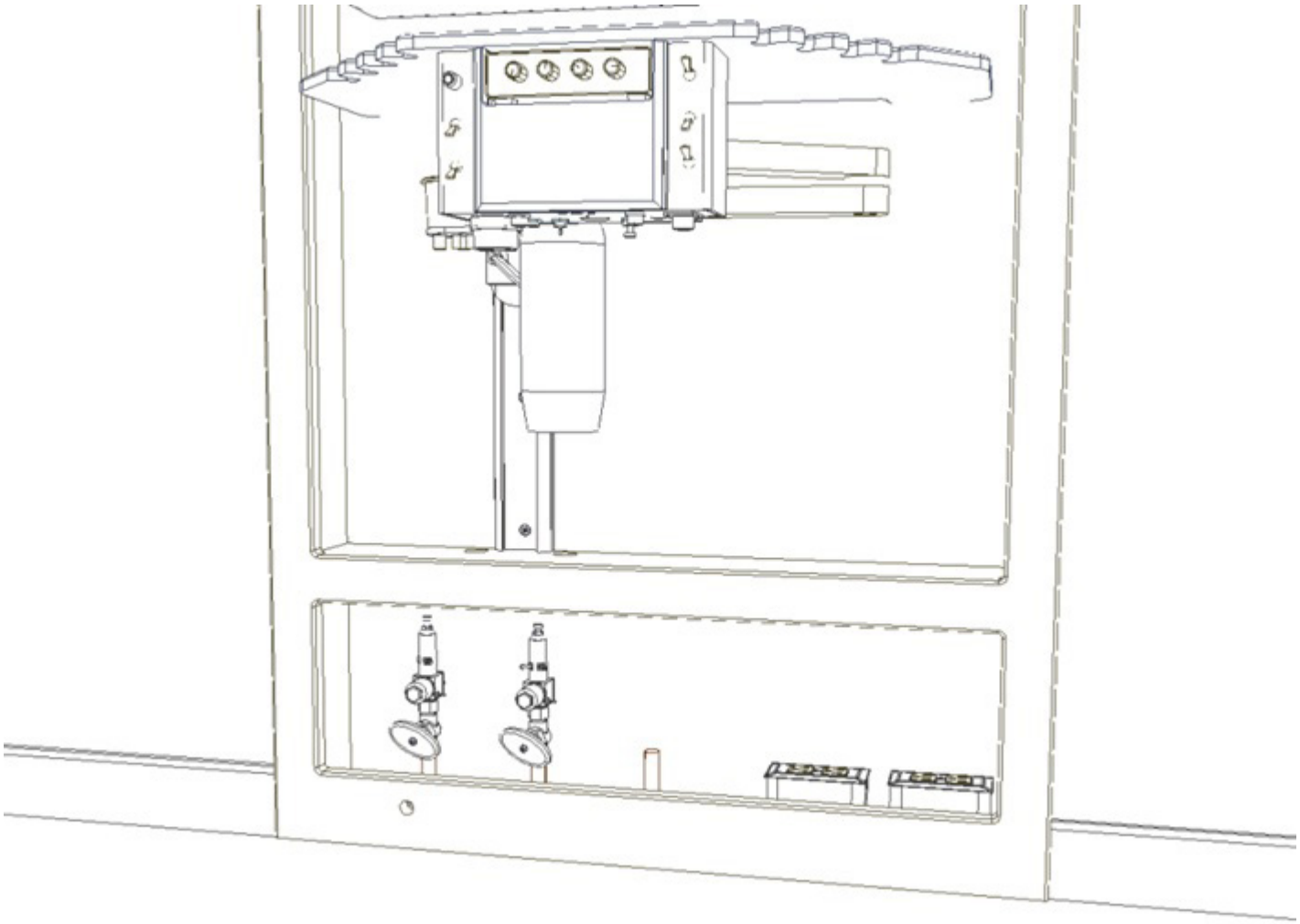

11 - WORKSTATION ASSEMBLY CONT’D

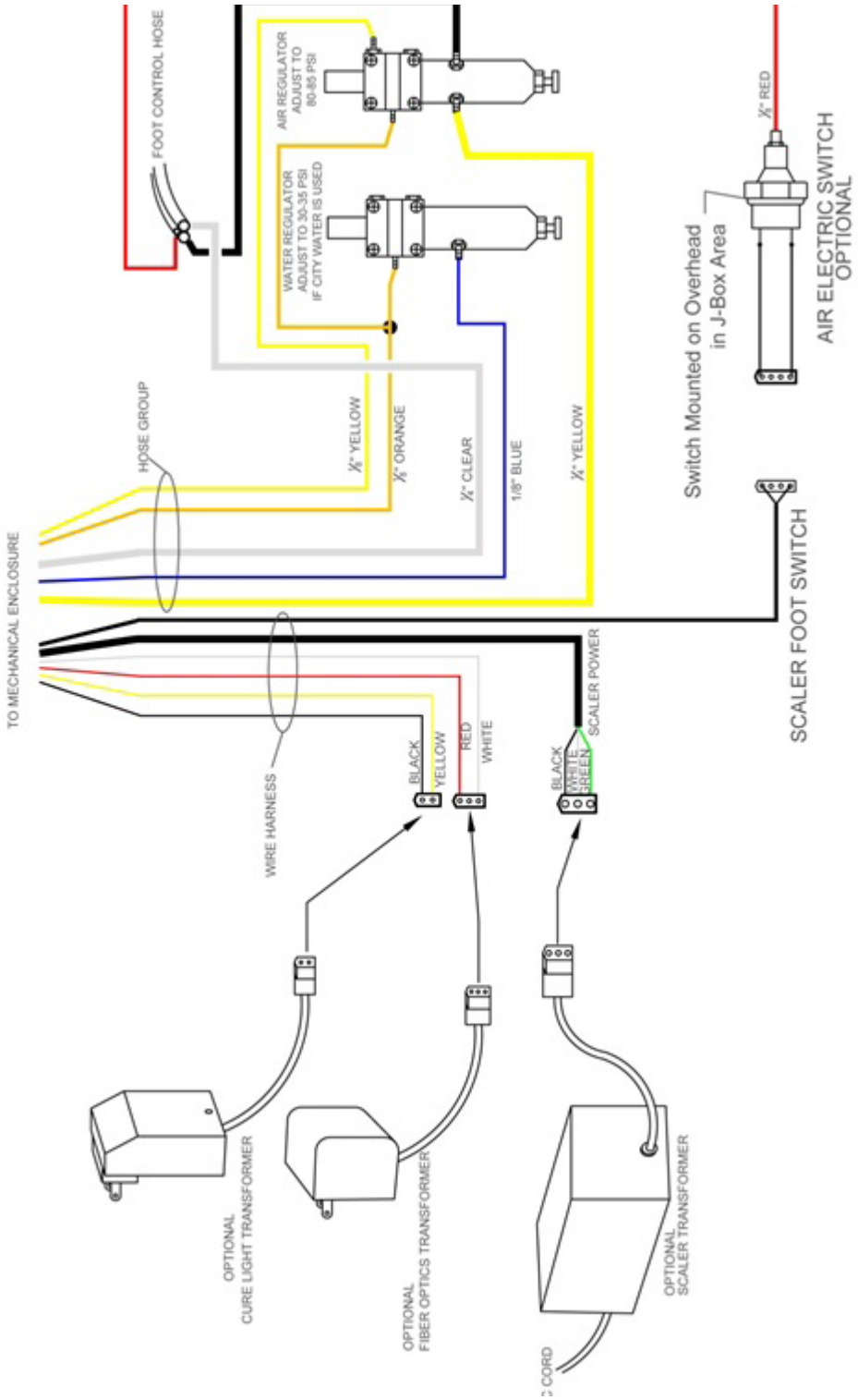

12 - MAINTENANCE

Cleaning instructions

Painted and Anodized Aluminum Surfaces

Clean with mild detergent, damp cloth and dry thoroughly after cleaning.
Do NOT use alcohol or solvent based cleaners, ScotchBrite or other abrasive pads.

CORIAN® Surfaces

Clean with warm, soapy water or any non-abrasive ammonia based cleaner or disinfectant. Dry thoroughly after cleaning. For tougher stains, use Clean EnCounters® from DuPont.
Do NOT use window-cleaning solutions (they will leave a waxy build-up), ScotchBrite or other abrasive pads.

For more information on cleaning CORIAN surfaces, go to:
http://www.dupont.com/products-and-services/construction-materials/surface-design-materials/brands/corian-sol¬id-surfaces/articles/how-to-clean-corian.html

DISINFECTING

Instruments and Workstation

Infection Control in the dental environment is always a high priority for both the user and the patient. It is the responsibility of the practitioner to be familiar with best practices and protocols for disinfecting of instruments and surfaces as recommended by CDC, ADA and OSHA.

In addition to the General Guidelines, the CDC recommends general cleaning and disinfecting of clinical contact surfaces, dental unit surfaces, and countertops at the end of daily work activities. Cleaning and disinfection are required if surfaces have become contaminated since their last cleaning. To facilitate daily cleaning, keep treatment areas free of unnecessary equipment and supplies.

To disinfect Corian surfaces, use a suitable chemical germicide (for example DisCide Ultra Disinfectant Spray). Dental devices that are connected to the dental water system and that enter the patient’s mouth (for example; handpieces, ultrasonic scalers, or air/water syringes) must be operated to discharge water and air for a minimum of 20–30 seconds after each patient.

Most of the surfaces are compatible with commonly used disinfectants, however if discoloration is noticed (especially hoses) it would be advisable to change cleaning products. If using a spray, use sparingly around electrical devices and components.

12 - MAINTENANCE CONT’D

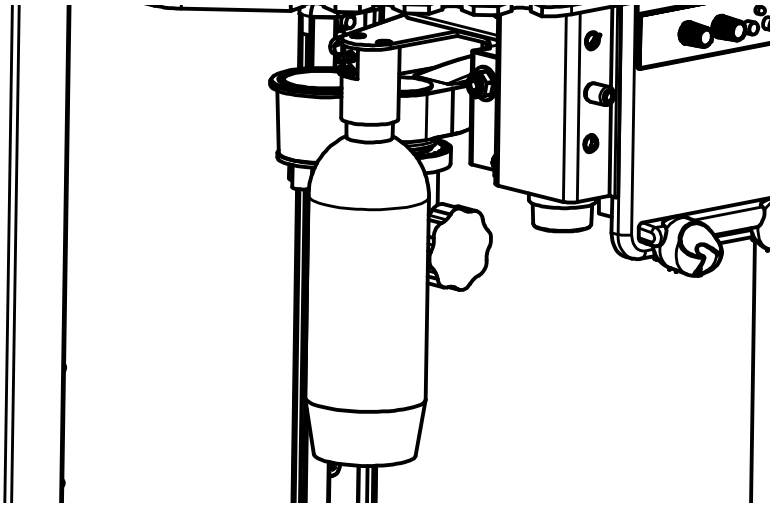

Waterline Disinfection Recommendations

The bottle mounted under the rear of the power channel is a .75L (750ml) or 2L (2000ml) bottle water bottle.

Its use is selected via the “Bottle” position on the Bottle/Off switch mounted on the power channel face. The “Off” position on the Bottle/Off switch relieves bottle pressure for bottle service and selects water from your piped water supply (if this option is purchased).

The correct water to use in the Ergonomic Products Workstation equipped with self-contained water depends on the quality of your municipal water.

Tap Water – If you have confidence in the quality of your municipal water supply, consider using tap water in your self contained water bottle.

Softened Water – Water hardness that is greater than 200mg/L, Ergonomic Products recommends use of a water softener to prevent build up of mineral deposits that may impact Workstation performance. Water pH should be compliant with local drinking water regulations.

Ergonomic Products does not recommend the use of distilled or reverse osmosis water in self-contained dental units.

It is important to regularly monitor the water in your dental equipment. The frequency depends on your test results and water quality goals. Although the ADA has established a target of less than 200 colony forming units per milliliter (cfu/ml) of heterotrophic, mesophilic organisms, acceptable water quality, according to The Center’s For Disease Control (CDC), suggest less than 500CFU/mL. https://www.cdc.gov/oralhealth/infectioncontrol/faqs/dental-unit-water-quality.html

Shocking you dental unit waterlines is required for every water treatment protocol followed up with a daily or continuous maintenance.

12 - MAINTENANCE CONT’D

When you should shock:

- Before using your EP Workstation for the first time, shock your dental unit waterlines.
- At least every quarter (There are yearly continuous products, please refer to manufacturer)
- When your waterline test results reveal contamination of 500CFU/mL
- Any time you change up your daily waterline maintenance protocol

Daily Maintenance:

- Fill water bottles with use of daily and a water treatment (For example; BluTab; EPA registration #84020-1).
- Flush waterlines at the beginning of the day for 30 seconds
- Flush waterlines for 30 seconds between patients
- Empty water bottles nightly

It is important to test the water in your self-contained dental unit once per month. If monthly results meet water quality requirements for all treatment rooms for three consecutive months, reduce testing to once every three months. Check with your dental supplier or local municipality for testing kits.

Treatment During periods of inactivity
Shut Down:
1. Remove and empty water bottle
2. Purge water from all waterlines including handpieces, ultrasonic scalers, and A/W Syringe.
3. Place empty water bottle back on unit.

Start up:
1. Shock dental unit
2. Test waterlines
3. Resume daily maintenance and fill water bottle.

Caution: Ergonomic Products self-contained water systems are not designed to deliver sterile solution. A separate means for administering sterile coolant and irrigant is required if you use the Ergonomic Products Workstations for surgical procedures.

Caution: Do not use saline solutions, mouth rinses or any chemical solutions not specified in this guide in your Ergonomic Products Self- Contained water system. These may damage the system components and cause equipment failure.

Check water lines periodically for deterioration and replace if necessary prior to patient use. If water line tubing needs to be replaced, please contact Ergonomic Products.

Ergonomic Products does not assume responsibility for you waterline treatment decisions. Always choose a waterlines maintenance protocol that fits your practice needs and in your practice budget. All microbials used for dental waterline maintenance must be registered with the EPA. NOTE: Depending on the cleaning/shock product used, you may need up to 3 days to complete the cleaning/shocking protocol. Always follow manufacturer instructions for cleaning/shocking procedures

12 - MAINTENANCE CONT’D

VACUUM USE AND MAINTENANCE

CAUTION: Always wear gloves when servicing dental workstations.

System description

Your workstation is equipped with a 5/8” main vacuum tube connecting to a 3-port vacuum canister (2 HVE and 1 Saliva Ejector) mounted in the forward part of the power channel, with the lid protruding through the cover for easy access. Units come standard with one saliva ejector valve and one HVE valve. Both valves are a quick-disconnect and autoclaveble type. Tips for both valves are industry standard and you can order these from your dental equipment supplier.

System maintenance Vacuum Canister

Check the vacuum canister and screen (part #409-155) weekly. Replace them as soon as lower than normal vacuum is detected. To facilitate cap removal, turn off the vacuum pump before servicing. Call Ergonomic Products, Inc. at 1-800-ERGO-4-US to order new components.

Valves

Valves can be autoclaved after each use or wiped down using any of the commercially available disinfecting wipes. Daily, draw clean water through the valves while working the valve handle to help prevent the buildup of debris. Brush the internal bore once a week with a stiff brush of proper size. Disassemble valves periodically (2-3 months) to clean internal parts and lubricate the O-rings.

Muffler and Oil Collector Maintenance

A combination muffler and oil collector quiets the spent drive and traps excess handpiece lubrication. Unscrew the lower portion of the canister to access the piece of gauze that acts as an absorbing pad. Check the gauze every couple of weeks and replace it as necessary.

12 - MAINTENANCE CONT’D

CLEANING AND DISINFECTING DENTAL UNITS AND ENVIRONMENTAL SURFACES

GENERAL GUIDELINES

After treatment of each patient and at the completion of daily work activities, countertops and dental unit surfaces that might have been contaminated with patient material or when the surface is contaminated with biological material must be cleaned with disposable toweling (for example PDI Super Sani Cloth) and water as necessary. Then disinfect surfaces with a suitable chemical germicide (for example DisCide Ultra Disinfectant Spray).

The CDC recommends using a chemical germicide registered with the EPA as a “hospital disinfectant” and labeled for “tuberculocidal” (i.e., mycobactericidal) activity to disinfect surfaces that have been soiled with patient material. These intermediate-level disinfectants include phenolics, iodophors, and chlorine-containing compounds. Because mycobacteria are among the most resistant groups of microorganisms, germicides effective against mycobacteria should be effective against many other bacterial and viral pathogens.

Low-level disinfectants—EPA-registered “hospital disinfectants” that are not labeled for “tuberculocidal” activity (e.g., quaternary ammonium compounds)—are appropriate for general housekeeping purposes such as cleaning floors, walls, and other housekeeping surfaces. The CDC does not recommend using intermediate- and low-level disinfectants to reprocess critical or semi critical dental instruments.
CDC Guideline for Disinfection and Sterilization in Healthcare Facilities, 2008; Centers for Disease Control and Prevention. Guidelines for Infection Control in Dental Health-Care Settings— 2003. MMWR 2003;52(No. RR-17):[inclusive page numbers]. FDA Processing/Reprocessing Medical Devices in Health Care Settings: Validation Methods and Labeling DRAFT GUIDANCE May 2, 2011.

12 - MAINTENANCE CONT’D

CLEANING

Metal Components

Use mild detergent and water or any of the commercially available sprays, such as 409, Fantastic, or others, with a soft cloth or sponge. DO NOT USE ABRASIVES as these will permanently scratch the finish.

Plastic, Rubber and Painted Surfaces

Use mild detergent and water or any of the commercially available sprays, such as 409, Fantastic, or others, with a soft cloth or sponge. DO NOT USE ABRASIVES as these will permanently scratch the finish.

Do NOT use a any cleaning products that contain HYDROGEN PEROXIDE.

Corian

Your Corian surfaces are delivered with a matte/satin finish and any of the above cleaners are acceptable. Minor surface blemishes can be brought back to a like-new finish with the use of a mild abrasive cleaner such as Comet on their own or in conjunction with a green or white Scotch-Brite Pad.

Dried composites can be scraped off using a single-edged razor blade or equivalent, being cautious not to dig into the surface.

If the surface becomes too scarred to be renewed with the above procedures, a resurfacing can be done. Please contact us or any Corian-certified installer for the correct procedure.

The FDA recommends that Items contaminated with blood or body fluids, which might contain blood borne pathogens, must receive intermediate level disinfection with a product having an EPA-registered claim for activity against hepatitis B after cleaning.

12 - MAINTENANCE CONT’D

DISINFECTING

Instruments and Workstation

Infection Control in the dental environment is always a high priority for both the user and the patient. It is the responsibility of the practitioner to be familiar with best practices and protocols for disinfecting of instruments and surfaces as recommended by CDC, ADA and OSHA.

In addition to the General Guidelines, the CDC recommends general cleaning and disinfecting of clinical contact surfaces, dental unit surfaces, and countertops at the end of daily work activities. Cleaning and disinfection are required if surfaces have become contaminated since their last cleaning. To facilitate daily cleaning, keep treatment areas free of unnecessary equipment and supplies.

To disinfect Corian surfaces, use a suitable chemical germicide (for example DisCide Ultra Disinfectant Spray). Dental devices that are connected to the dental water system and that enter the patient’s mouth (for example; handpieces, ultrasonic scalers, or air/water syringes) must be operated to discharge water and air for a minimum of 20–30 seconds after each patient.

Most of the surfaces are compatible with commonly used disinfectants, however if discoloration is noticed (especially hoses) it would be advisable to change cleaning products. If using a spray, use sparingly around electrical devices and components.

13 - TROUBLESHOOTING

Problem	Possible Issue and Solution
No air to workstation	Air compressor is off Air supply valve is off Air regulator not adjusted properly. Adjust to 80-85 PSI Master switch is off or not suppl;ying air to master regulator
No bottle water supply	Master switch is off. Bottle is empty Bottle/ Line switch is on line (if applicable) Bottle Pressure switch is off (if applicable
No or low drive air for the handpieces	check air pressure supplied to workstation at 80+ PSI. Adjusting screws on bottom of power channel not adjusted properly
No water for handpieces	Check water supply with syringe, if no go to 2 Wet/Dry switch on face plate or foot pedal not switched on Flow control for handpieces not adjusted
No air / water at syringe	Check air supply, bottle water supply
Workstation does not turn on	Verify that the workstation is properly connected to a working air source
No line water supply (optional)	Dental water supply switch (on Workstation) or water valve shut off at regluator Water regulator not adjusted Master switch is off or not supplying air to master regulators.

For Support, call Ergonomic Products directly at 1-866-374-6487