ergonomic products™

Performance Without Compromise®

Productivity **Solutions**

Resupply Cabinetry

The following pages excerpted from Ergonomic Products catalog: 950-075revE Click here to download full catalog

www.ergonomic-products.com

ergonomic products
Performance Without Compromise™

30” Resupply Pulldown (Item C1A1)

Double your **storage space...** while improving **accessibility, visibility** and **safety.**

Standard Features

- Hydraulic pull-down shelving provides easy access to materials.
- Maximizes use of vertical storage space without sacrificing safety.
- Open shelving allows visual inventory - know at a glance, what you have and where it is.
- Partition storage under unit allows for a quick and customizable arrangement of materials.
- Hygiene version with doors available (see C1A2 below)

RESUPPLY CONFIGURATION

Cabinet Color Selections:

☐ Available in standard color choices.

☐ - ***OR*** - Upgrade to woodgrain finish. (Standard EP Woodgrain finishes)

Cabinet Doors:

☐ No Doors (this is the standard configuration).

☐ - ***OR*** - Include doors

Even more PullDown styles and configurations are coming soon!

Check our website or call for details.

HYGIENE CONFIGURATION (item C1A2)

While open storage is recommended in central resupply areas, it is less desired in patient-oriented spaces.

To address this, we offer the Hygiene Resupply. Intended for use in Hygiene rooms, this version eliminates the open, partitioned under-storage and is only sold with doors.

Cabinet Color Selections:

☐ Available in standard color choices.

☐ - ***OR*** - Upgrade to woodgrain finish. (Standard EP Woodgrain finishes)

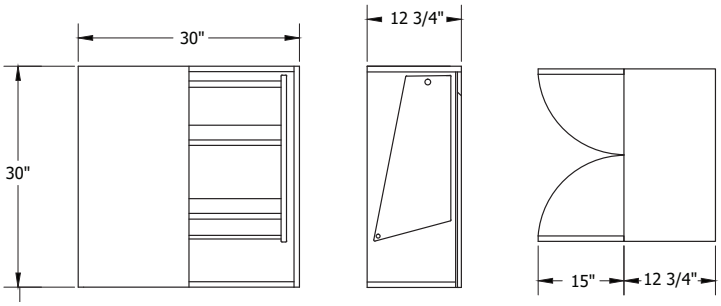

30” Resupply Pulldown (Item C1A1)

Dimensions & Placement

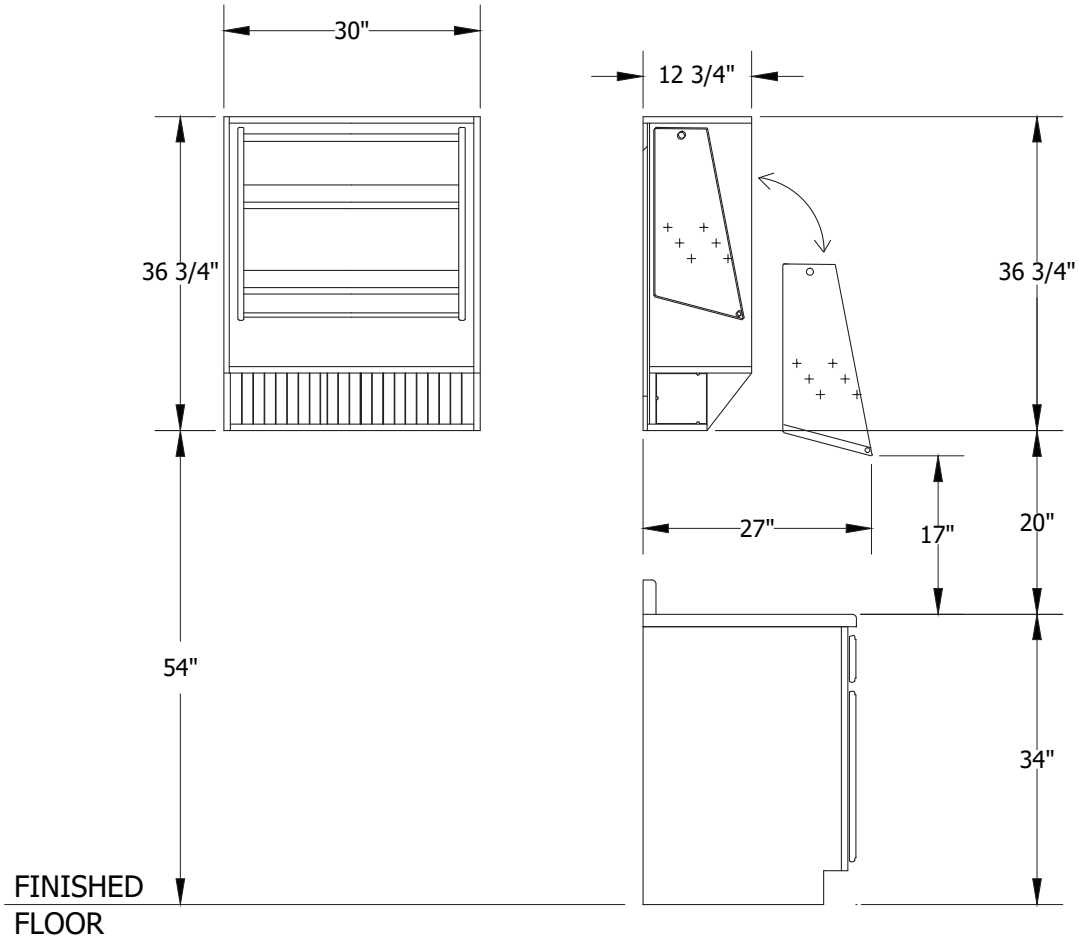
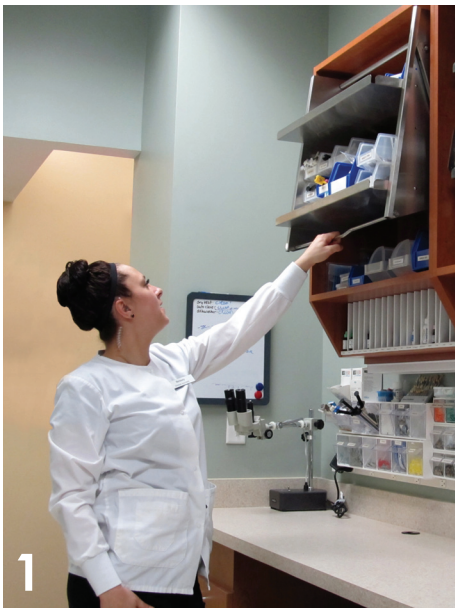
Ergonomic Efficiency